Better Homes and Gardens®

WOOD®

12/45

DON'T MISS OUR SHAKER BUFFET
Page 42

THE #1 MAGAZINE FOR HOME WOODWORKERS

SEPTEMBER 1991 • ISSUE NO. 45
Display until September 10

WOOD REVIEWS BIG-TICKET SCROLLSAWS

STEP-BY-STEP

HOW TO CARVE A HUMAN FACE

A TOOL INVENTORY CAN SAVE YOU THOUSANDS!

CROWD-PLEASERS!

- Fat Cat™ grader
- Napkin/letter holder
- Rocking-bear plaque
- Thin-strip ripper
- Kid's picture frame
- Plate-turning jig

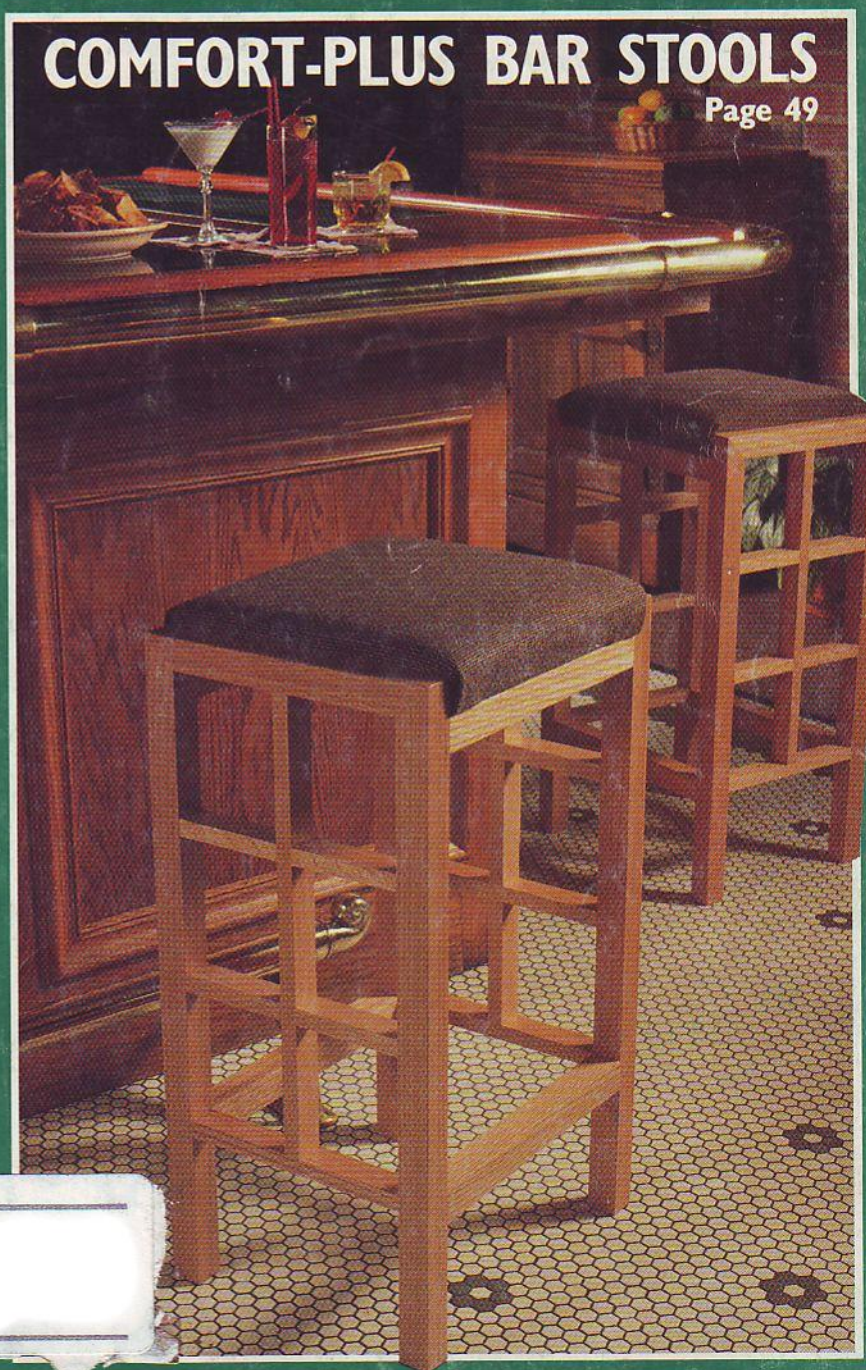

COMFORT-PLUS BAR STOOLS

Page 49

1400[illegible]

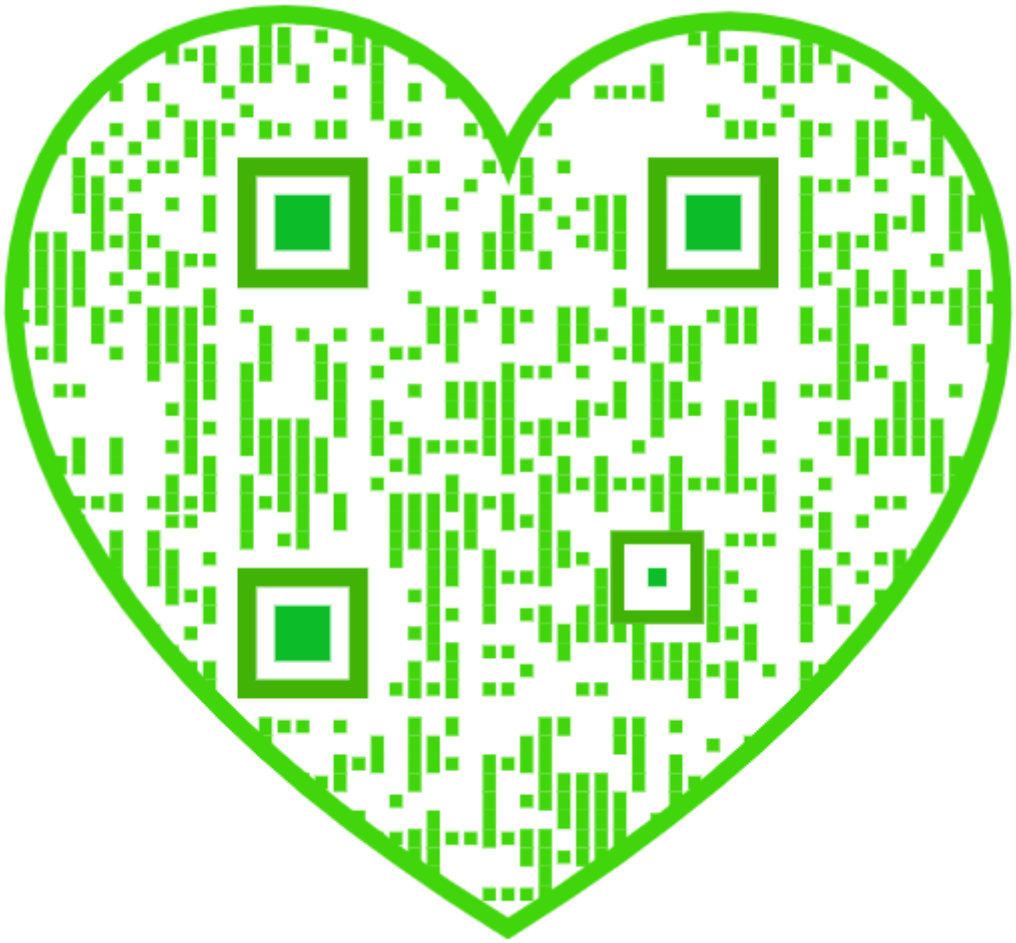

THE EDITOR'S ANGLE

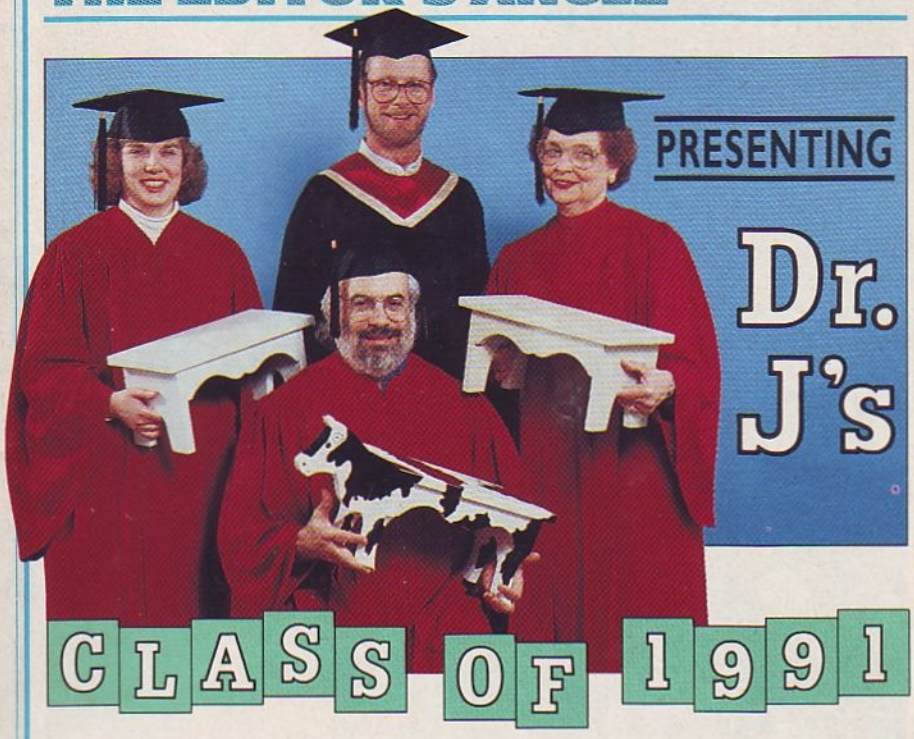

For the past 17 years, our project builder, Jim Boelling (I call him Dr. J), has taught adult-education woodworking classes in the evenings. During that time, he's instructed hundreds of people in safe and effective woodworking. This year, he tested his teaching skills on three bright students from our staff. And as you can see by looking at the photo *above*, all graduated with distinction.

Margaret Closner, our business office clerk, and Louise Anderson, the administrative assistant for *Weekend Woodworking Projects*®, are brand-new to woodworking. But after just one semester with the good doctor, both have accomplished a lot. First, it was the five-board step stool shown in the photo. And now they're at work on a heart-shaped keepsake box and some cedar coat hangers. Sounds like "woodworker's fever" to me.

Margaret says she enrolled because she wanted to better understand reader questions as well as woodworking tools and techniques. "And besides," she says, "seeing all the projects sitting around the offices, I said to myself, 'I can do that!'"

John Hofheimer, the third member of the graduating class, told us during his hiring interview that his knowledge of woodworking was a lot like the North Platte River, "a mile wide and an inch deep." Actually, he knows more about woodworking than he admitted, but he does have trouble with his math. Everyone else in class cut five pieces for the five-board step stool, but John ended up with six pieces, one of which looks like a cow's head. The result: a six-board Holstein cow stool. He reports that he's already had a request for a pig stool from one of his wife's friends who works in the swine industry.

Keep up the good work, class. You're off to a fast start.

Larry Clayton

Photograph: Hopkins Associates

EDITORIAL MAILING ADDRESS: *WOOD* magazine, P.O. Box 11454, Des Moines, IA 50336-1454.
SUBSCRIPTION SERVICE (including change of address): *WOOD* Customer Service, P.O. Box 10628, Des Moines, IA 50336-0628. Please enclose your address label from a current issue. If you wish, call toll-free 800/374-9663.
CUSTOMER-SERVICE TEAM: Supervisor, Chris Warwick, Marjene Cline, Velma Williams. WE CARE!

End of Summer
SALE
EXPIRES 9-30-91

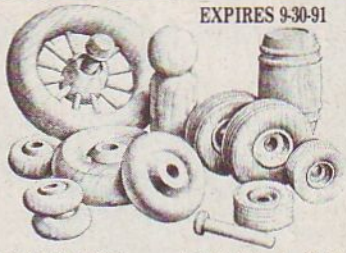

2-3/4" Spoke Wheel	$ 1.00 / EA	$ .80 / EA
1" Wheel	$ 6.00 / 100	$ 4.00 / 100
1-1/4" Wheel	$ 8.00 / 100	$ 5.50 / 100
1-1/2" Wheel	$10.00 / 100	$ 7.50 / 100
2" Wheel	$18.00 / 100	$15.50 / 100
Axle peg for above pegs	$ 5.00 / 100	$ 3.00 / 100
2-3/8" Little Man	$18.00 / 100	$16.00 / 100
1" Treaded Tire	$10.00 / 100	$ 8.00 / 100
1-1/4" Treaded Tire	$12.00 / 100	$10.50 / 100
1-1/2" Treaded Tire	$14.00 / 100	$13.00 / 100

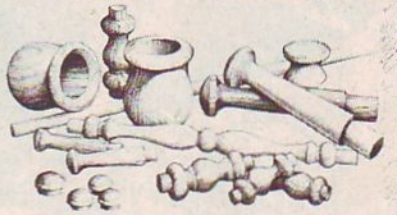

1-3/8" Candle Cup	$18.00 / 100	$13.50 / 100
5/8" Candle Cup	$10.00 / 100	$ 8.50 / 100
3-1/2" Shaker Peg	$15.00 / 100	$11.50 / 100
2-7/16" Medium Peg	$14.00 / 100	$11.00 / 100
1-3/4" Mini Peg	$ 7.50 / 100	$ 5.00 / 100
3/8" or 1/2" Birch Button	$ 2.00 / 100	$ 1.50 / 100
1-1/2" Spindle	$10.00 / 100	$ 8.00 / 100
2" Spindle	$14.00 / 100	$12.50 / 100
5-3/4" Spindle	$ .50 / EA	$ .40 / EA

1-5/8" Sawtooth Hanger	$ 4.00 / 100	$ 3.00 / 100
2-3/4" Sawtooth Hanger	$ 4.50 / 100	$ 3.50 / 100
5/8" Picture Hanger	$ 2.00 / 100	$ 1.50 / 100
1-7/8" Picture Hanger	$ 4.50 / 100	$ 4.00 / 100
3/8" Bead	$ 3.25 / 100	$ 3.00 / 100
1/2" Bead	$ 3.50 / 100	$ 3.25 / 100
5/8" x 3/4" Spool	$ 5.00 / 100	$ 4.50 / 100
3/4" x 1" Spool	$ 6.50 / 100	$ 6.00 / 100
1-1/4" x 1/4" Heart	$ 7.50 / 100	$ 6.50 / 100
2-1/2 x 1/4" Heart	$ 5.50 / 25	$ 5.00 / 25
2-1/2" Hen Egg	$12.50 / 25	$10.50 / 25
4-1/4" Goose Egg	$ 3.00 / EA	$ 2.50 / EA

1-800-722-0311

To receive sale prices use Sale #B51

FREE With Order
ALL NEW WOOD PARTS CATALOG $1.00

We accept M/C, VISA Check, or M.O. All orders add $4.00 Handling
TX add 7% tax. Canada add 30%
Alaska, Hawaii add 15% for freight.

Woodworks
P.O. Box 14507 Ft. Worth, TX 76117

Trace Your Design On Wood With

Saral®

Wax-Free Transfer Paper

Transfer your design to any wood surface with Saral-Transfer Paper.
- Waxless and greaseless - erases like pencil with no smear.
- Ink or paint over the tracing - won't skip.
- Re-usable.
- Available in 5 colors: graphite, white, blue, red, yellow.
- Comes in Sampler and Tole Kit packages, and 12-ft. Rolls.

Ask for it at your local art and craft materials store. For further information contact:

Saral Paper Co., Inc.
322 W. 57th St. Suite 30-T
New York, NY 10019
(212) 247-0460

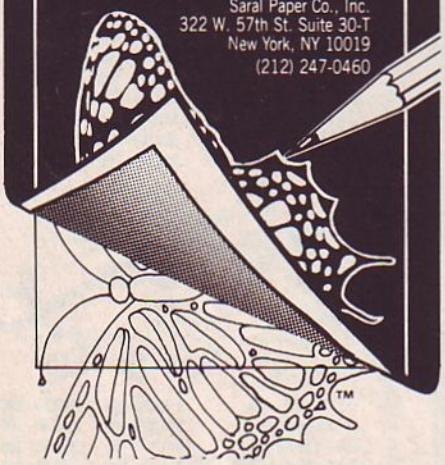

IT'S FREE!

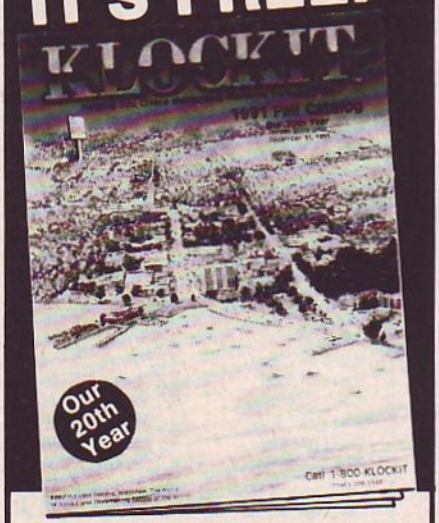

Our new catalog is loaded with quality products to enhance your wood and clockmaking projects.

QUARTZ & MECHANICAL MOVEMENTS
CLOCK COMPONENTS & ACCESSORIES
WEATHER INSTRUMENTS • HARDWARE
PLANS • MUSIC MOVEMENTS

For your free catalog, call toll-free

1-800-556-2548

KLOCKIT™

P.O. Box 542, Dept. WD91
Lake Geneva, WI 53147

Better Homes and Gardens®

WOOD®

THE #1 MAGAZINE FOR HOME WOODWORKERS

This issue's cover wood grain: hickory *Cover photo: Hopkins Associates*

SEPTEMBER 1991 ISSUE NO. 45

CRAFTSMAN CLOSE-UP
City lights, country sights 37
New York City's Mario Rodriguez makes high-end country pieces for the elite, choosing the precision and TLC of hand tools over production-shop noise and automation.

Shaker-style buffet 42
Subdued beauty and versatility mark this Shaker reproduction, making it a natural for traditional, country, and contemporary settings.

DEVELOP YOUR SHOP SKILLS
How to create made-to-match cabinet panels 48
Want to know how to make a cathedral or V-grain pattern on cabinet doors or sides? Check out the tried-and-true method found here.

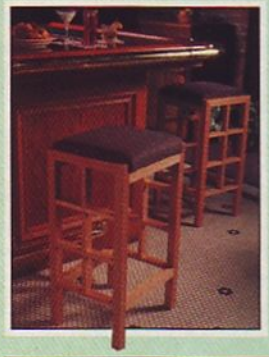

Bottoms-up barstool 49
End the seating search for your breakfast or wet bar by building one or more of these fashionable stools. See a painted version inside.

CARVING TECHNIQUE
Making faces 54
Discover strategies professionals use when planning the carving of a human face. Then, try your newfound knowledge on a block of wood.

Thin-strip ripper 58
This easy-to-make adjustable shop aid fits your tablesaw's miter-gauge slot and lets you cut multiple strips of wood to any thickness you like. Better yet, it keeps your hands and fingers out of harm's way.

Marlow's marvelous woodcuts 60
In 1932, Margaret Lowe began designing and making silhouette woodcuts to sell. Under new ownership, this novel business now markets 2,000 designs worldwide.

Fat-Cat™ grader 62
A rotating front-wheel assembly and hand-operated blade make this the perfect sandbox toy for tykes interested in cutting a new path.

The woods that carvers crave 66
Though basswood and butternut are two favorite woods of experienced carvers, we've listed the names and traits of others you may want to try.

TOOL BUYMANSHIP
Scrollsaws over $500 68
Sure, you can purchase a light-duty benchtop scrollsaw for about $150 and get by. But if you're serious about your scrollsawing, a better machine may be in your future.

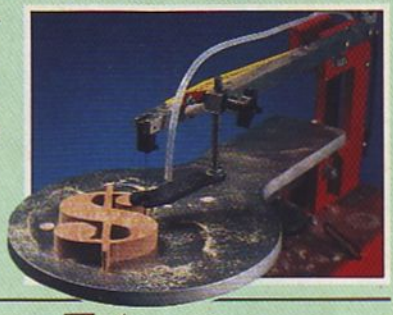

A picture could be worth thousand$ 74
Insure your workshop and arsenal of tools from fire and burglary with the sensible safeguards outlined in this must-read article.

THE CRAFT SHOP
Letter/napkin holder 76

Rocking-bear wall plaque 78

Picture frame 80

TURNING
Plate turning 101 82
This time, make a plate instead of a bowl. You'll be glad you did.

Turning jig for better bottoms 84
Now, at last, you can avoid marring the underside of your turned plates.

SHORT-SUBJECT FEATURES

Editor's Angle	1	Tips From Your Shop	22
Talking Back	8	Ask *WOOD*®	32
Products That Perform	14	Yesterday's Tools	86
Wood Anecdote	17	Plate-Turning Stock	88
Kids And Sailboat Cutout	18	Finishing Touches	96

Mobile Machine Bases
to put your entire shop on wheels

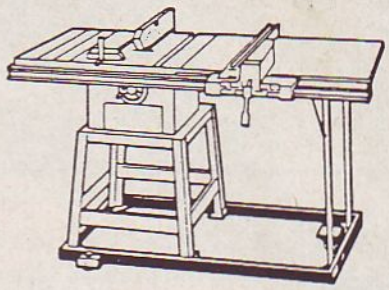

- Hundreds of Models available
- 3 - 2½" Ø Wheels for Stability
- Dual wheel locks for Positive Positioning
- Raises machine only 3/4"
- All Steel & Precision Welded
- Lifetime Warranty
- Made in America

Free Catalog

HTC Products, Inc.
120 E. Hudson • P.O. Box 839
Royal Oak, Michigan 48068-0839
(313) 399-6185 • (800) 624-2027

Make Your Own "Antiques!"

Select from many museum reproduction furniture pieces, available in easy-to-build, money saving kits, or completely finished! No woodworking skills necessary. Send $3 for 32 page color catalogue.

Cohasset Colonials, 49109 Ship St., Cohasset, MA 02025
Our 53rd. Year!
❑ YES! Enclosed is $3.
Name _____
Address _____
City _____
State _____ Zip _____

Wood-Mizer®
World's Largest Manufacturer of Portable Sawmills

Own a Sawmill!
Start a Profitable Business!
Save money cutting your own lumber, make money cutting for others.

1-800-553-0219
32 Page Full Color Catalog - $2.00
66-minute demonstration video-$10.00
MasterCard or Visa accepted
8180 West 10th Street • Dept. QQ55
Indianapolis, Indiana 46214-2400

Better Homes and Gardens®
WOOD®

THE #1 MAGAZINE FOR HOME WOODWORKERS

September 1991 • Vol. 8, No. 6 • Issue No. 45

Editorial/Art Staff

Editor **LARRY CLAYTON**
Managing Editor **JIM HARROLD**
Art Director **C. L. GATZKE**
Assistant Art Director **PERRY A. McFARLIN**
Design Editor **JAMES R. DOWNING**
Senior Editor **PETER J. STEPHANO**
How-To Editor **MARLEN KEMMET**
Products/Techniques Editor **BILL KRIER**
Special-Interest Editor **LARRY JOHNSTON**
Copy/Production Editor **JOHN D. HOFHEIMER**
Project Builder **JAMES E. BOELLING**
Administrative Assistant **DARLENE REYNOLDS**
Business Office Clerk **MARGARET CLOSNER**
Secretary **ROSEMARIE BURCH**

Technical Consultants: Product Testing **GEORGE GRANSETH, BOB McFARLIN;** Products That Perform **STEVE OSWALT;** Wood Technology **PAUL L. McCLURE;** Collectible Tools **PHILIP WHITBY;** Carving **HARLEY J. REFSAL**

Publisher **WILLIAM R. REED**
New York Advertising Manager **CHRIS W. SCHRAFT**
Advertising Representatives **CRAIG KAPLAN, LORIANN RUGGERI, DARRYL HUDSON**
Promotion/Research Director **EILEEN SULLIVAN**
Marketing Services Manager **NANCY DALY**
Publisher's Assistant **NANCY LOPEZ**
ADVERTISING OFFICES: 750 Third Ave., New York, NY 10017. Phone 212/551-6903.

Circulation Manager **ALAN BRUSH**
Newsstand Circulation Director **MICHAEL SENIOR**
Business Manager **TERRY UNSWORTH**
Production Director **ROBERT C. FURSTENAU**
Public Relations **SONDY DAGGETT**
Special Projects **JAY BURZON**

Magazine Group Officers

Group President **JAMES A. AUTRY**
SVP, Publishing Director **ADOLPH AUERBACHER**
SVP, Editorial Director **DORIS EBY**
SVP, Operations **DEAN PIETERS**
Group VPs: Publishing Directors **MYRNA BLYTH, BURTON H. BOERSMA, CHRISTOPHER M. LEHMAN**
Group VP, Circulation Director **CLEM SEVDE**
Controller **MAX RUNCIMAN**

Corporate Officers

Chairman of Executive Committee **E.T. MEREDITH III**
Chairman of the Board **ROBERT A. BURNETT**
President and Chief Executive Officer **JACK D. REHM**
Group Presidents: Broadcasting **PHILIP A. JONES;** Magazine **JAMES A. AUTRY;** Real Estate **ALLEN SABBAG**

Better Homes and Gardens® WOOD® — the #1 magazine for home woodworkers (ISSN-0743-894X) is published nine times a year in January, February, April, June, August, September, October, November, and December by Meredith Corporation, 1716 Locust St., Des Moines, IA 50336. Second-class postage paid at Des Moines, Iowa. Better Homes and Gardens trademark registered in Canada and Australia. Marca Registrada en México. **ONE-YEAR SUBSCRIPTION PRICES:** U. S. and its possessions, $24.97; Canada, $34; other countries, $38. **POSTMASTER:** Send address changes to WOOD, 1716 Locust St., Des Moines, IA 50336.
©COPYRIGHT MEREDITH CORPORATION 1991. ALL RIGHTS RESERVED. PRINTED IN U.S.A.
Canadian GST Reg. #R123482887.
MPA

New from McCloskey. Four more Clean Air Formula™ wood finishing products. Low odor. And water-based for easy clean up. Look for them when you want to protect wood...and air. For information, 1-800-767-CLEAN. McCloskey

SCROLLVERGNÜGEN*

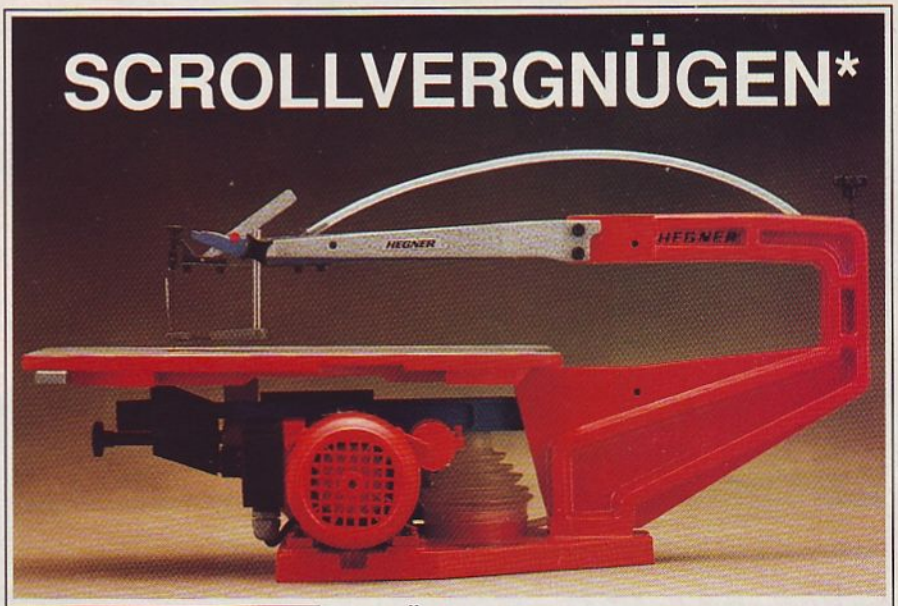

*VERGNÜGEN: A German noun meaning delight or pleasure.
HEGNER - the precision scroll saw consistently rated #1.
Smooth • Easy • Versatile • Fun • Reliable

Now on sale starting at only $399! Ask for free information!

☎ 1·302·322·2226 ☎

☐ Please send free information on HEGNER Precision Scroll Saws. 460

Name _____
Address _____
City, State _____
Phone _____ Zip _____

ADVANCED MACHINERY IMPORTS
P.O. Box 312, Dept. 460
New Castle, DE 19720
FAX 302·322·3479

TALKING BACK

Continued from page 11

Switch-wiring diagrams for dust collector corrected

If you're planning to wire a remote dust-collector switch using the diagrams we published on page 14 of the June 1991 issue of this magazine, don't. Those diagrams are inaccurate. If you already installed switches using them, rewire them to conform to the corrected diagrams, *right.*

In the future, whenever we publish a wiring diagram in the magazine, we will run it by our resident wiring authority, Jim Downing, and a certified electrician first. This should prevent errors of this type from happening again.

We're renewing free for 1 year the subscription of John A. Holdeman of Goodman, Mo., for alerting us to the problem. John should know wiring; for 30 years he worked in the residential, commercial, and industrial electrical fields.

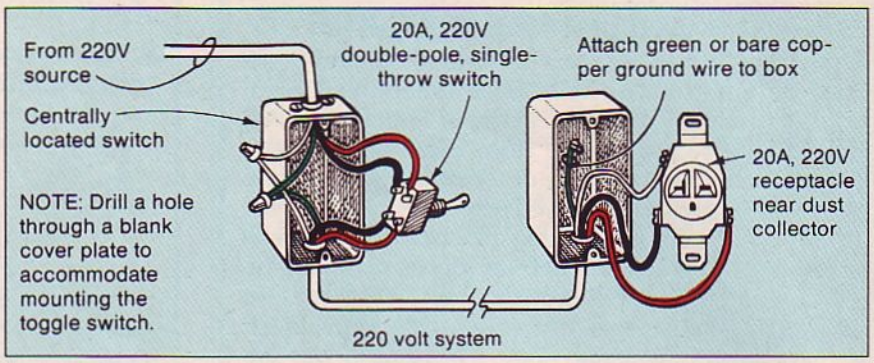
From 220V source
Centrally located switch
NOTE: Drill a hole through a blank cover plate to accommodate mounting the toggle switch.
20A, 220V double-pole, single-throw switch
Attach green or bare copper ground wire to box
20A, 220V receptacle near dust collector
220 volt system

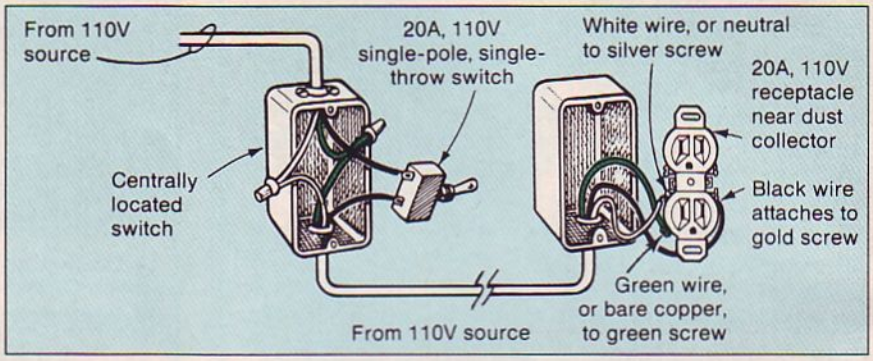
From 110V source
Centrally located switch
20A, 110V single-pole, single-throw switch
White wire, or neutral to silver screw
20A, 110V receptacle near dust collector
Black wire attaches to gold screw
Green wire, or bare copper, to green screw
From 110V source

We've helped hold it together... Since 1903

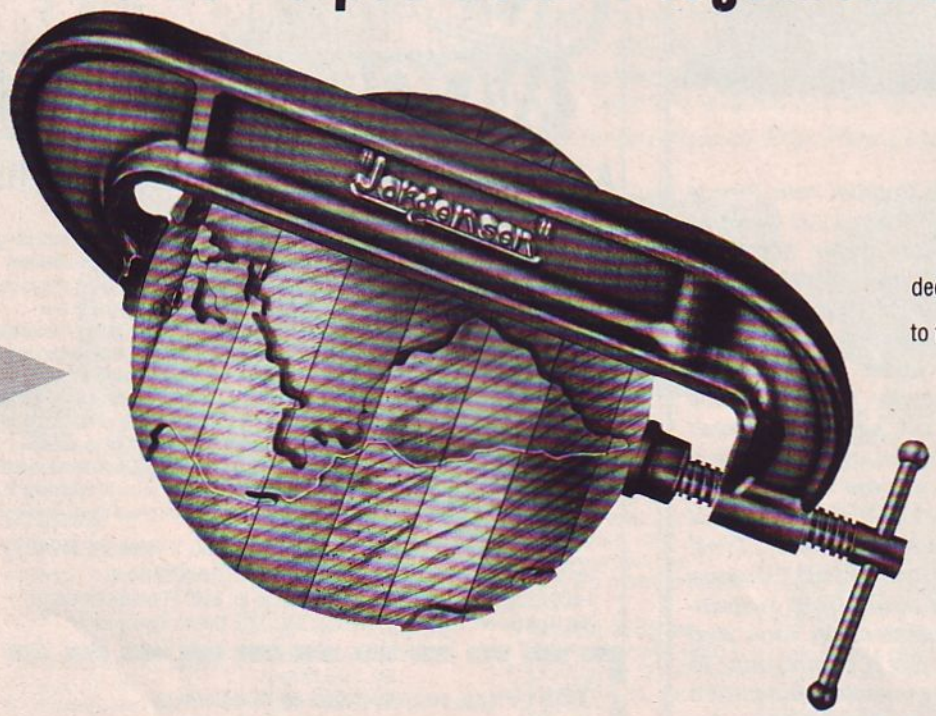

"Jorgensen"®
"Pony"®
'Adjustable'™

Quality in our products... dedication in our service. We've held to these commitments just as you've held up our Clamps and Vises as your standards to each new generation since 1903. We'll continue to hold consistently to our traditions of excellence.

Write for our Catalog SEND $1.00
Adjustable Clamp Company
410 N. Ashland Avenue, Chicago, IL 60622

Belated praise for our tool issue

Please pardon my procrastination in writing. I greatly appreciate the information in the tool issue [*WOOD*® issue number 38] and have used it in making three major purchases.

—Hart Bandstra, Robstown, Texas.

Reader needs HVLP HELP

I am interested in water-based finishes and enjoyed the article in the April 1991 issue. I'm making the switch from solvent to water and need a high-velocity, low-pressure (HVLP) spray gun. In trying to call HVLP Technologies in California, I got no answer using the number listed in your article. How can I get in touch with these folks?

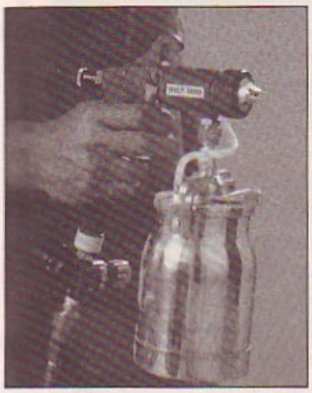

—Dave Harskamp, Sioux Center, Iowa

When we tried to call HVLP Technologies, Dave, we reached a recording saying the number was no longer in service. During the publication of our article, HVLP apparently sold out to another company, which plans to market the unit, according to Aaron Shaw, manager of Hawkeye Auto Paint in Des Moines. Meanwhile, you can buy the HVLP 5000, recommended in our article, for $358.50 COD., ppd. from Hawkeye Auto Paint, 417 12th St., Des Moines, IA 50309. For more information, call 515/282-6099.

A radial-arm saw dust collector revision

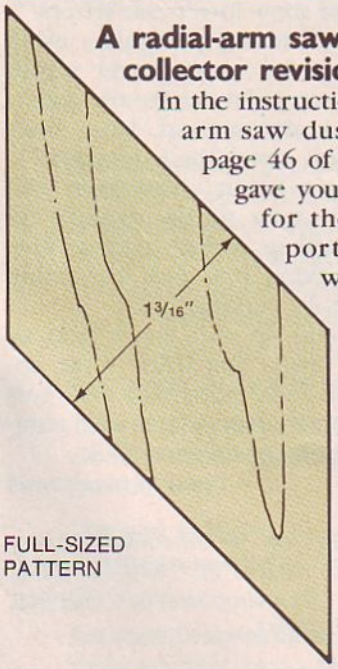

In the instructions for building a radial-arm saw dust collector, found on page 46 of the June 1991 issue, we gave you an incorrect dimension for the ¼"-thick louver supports. Cut that stock 1 3/16" wide by 22" long instead of the 1 11/16" width called for in the article. The full-sized pattern on page 47 of that issue (and left) is correct. Although the mitered cut—as shown on the drawing—measures 1 11/16", that dimension is simply the result of miter-cutting the 1 3/16"-wide stock.

ROBLAND

The Intelligent One-Man Shop

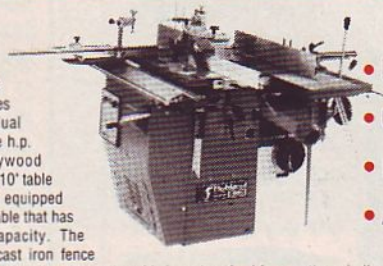

The Robland X31 features heavy duty cast iron worksurfaces with 3 individual motors of three h.p. each. Full plywood capacity on the 10" table saw, which is equipped with a sliding table that has 50" cutting capacity. The shaper has a cast iron fence system with individually micro adjustable in and outfeed fences, the spindle sizes are 3/4" and 1 1/4". The jointer is 55" long and it features a three knife cutter head. to operate the 12" thickness planer you simply fold the jointer tables out of your way. This process only takes 5 seconds. The thickness planer will accept wood 9" thick. The chuck for the mortiser will self center any bit from 0" to 5/8". the X, Y, Z table is adjustable on all three axes and it will make extremely accurate quality joinery for you in seconds. No function change takes more: than 30 seconds.

- Heavy Duty
- Cast Iron
- Powerful
- Accurate

CALL TODAY FOR INFORMATION ON A FREE 40 MINUTE VIDEO

LAGUNA TOOLS

2081 Laguna Canyon Road
Laguna Beach, California 92651
1-(800) 234-1976

A Must For The Wood Turner!

Allows projects such as this to be completed with ease

Unique design for few parts and quick installation.

Eliminates need for centers for inside and outside turning

Installed split-ring can be removed quickly for use on another project

A unique concept for clamping wood for turning. Extremely valuable for craftsmen, hobbyists & students—many projects can be worked on, removed & replaced with only one split-ring clamp chuck and all surfaces still remain concentric.

This one tool with it's split ring design allows turning projects from a wood stock with min. diameter of 3¾" and max. only determined by lathe being used. Eliminates wood screws and face plates.

The split ring can be ordered for spindle threads of ¾ x 16, 1⅛ x 8, 1¼ x 12, 1 x 8, ⅝ x 11 and ¾ x 10.

Special sizes can be made to order.

$195.00

plus $4.50 shipping/handling
MD residents add 5% sales tax

DE PEE-S™ SPLIT RING CHUCK

1-800-253-2569
VISA/MASTER CHARGE

8021 Queenair Drive
Gaithersburg, MD 20879
1-301-963-7238 (MD)

WOOD ANECDOTE

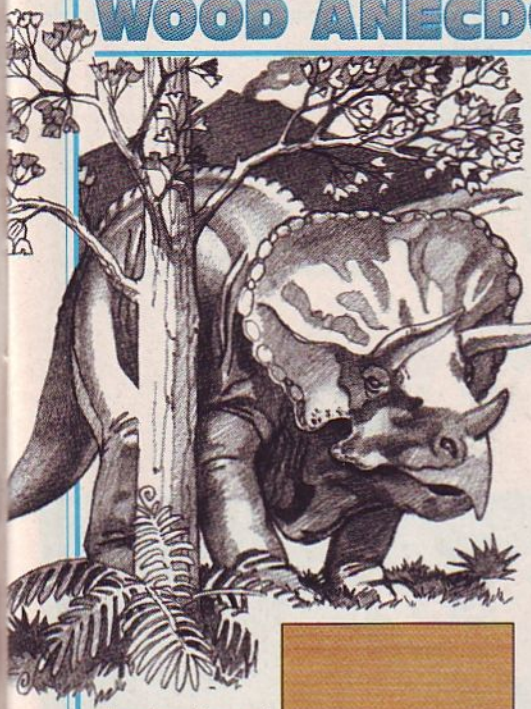

The hardiest of street trees, the ginkgo remains unchanged from prehistoric times.

THE TREE THAT LIVED WITH DINOSAURS

Already ancient when dinosaurs walked the earth, one species of tree survives virtually unchanged into the space age. Defying air pollution, disease, and insect infestation, just as it has for 150 million years, the ginkgo (*Ginkgo biloba*) flourishes along city sidewalks and thoroughfares in the United States and other temperate regions of the world.

To the ginkgo, 20th-century perils don't stack up to those of past millenniums. Drifting continents failed to destroy it. So did the alternating climatic cycles of tropical temperatures and frigid ice ages. Unlike its contemporaries, the ginkgo defied death. It also stopped evolving as far back as the Paleozoic era, appearing today as it did in prehistoric times.

By the time man began migrating and populating the planet, though, the ginkgo had retreated from its once-global range to the mountain forests of eastern and western China. There it thrived until the early 1700s, when explorers brought seedlings to Europe. In 1784, the ginkgo was introduced to America.

In China, ginkgo yielded its wood for carving, and the nuts of its somewhat foul-smelling fruit (that only the female tree produces) for toasted treats. However, in ginkgo's new lands, it makes the ideal ornamental and the hardiest of all street trees. When you see it, remember that you may be viewing what some scientists believe to be the living link in the evolution of ferns to trees.

Illustration: Jim Stevenson

FALL IN STEP WITH THE RIGHT TOOLS!

Elu
3338 2-1/4 HP VS Plunge Router $249
3380 jointer/spliner with case 245

DELTA
34-782 3 HP Unisaw W/Unifence & Cover $1549*
34-781F 1.5 hp unisaw w/fence 1349*
34-763 3 hp Jet Lock unisaw 1379*
34-761 1.5 hp Jet Lock unisaw 1199*
34-445 10" cont saw w/30"uni 819
34-444 10" contractors saw 619
33-055 8-1/4" sawbuck w/legs 589
28-283 14" bandsaw 3/4HP w/std 729
43-375 3 HP HD Two Speed Shaper $1469*
22-667 13" planer w/stand & ext 1149
31-730 6"belt/12" disc sander 969*
37-350 8" jointer DJ-20 w/stand 1299*
14-600 hollow chisel mortiser 469
36-220 10" comp. miter saw 235
28-180 NEW Bench Bandsaw $169
22-540 12" planer w/dust chute 399
43-505 router shaper NEW 275
50-179 3/4 HP dust collector 338
32-100 plate jointer 288
36-755 10" cabinet saw 869

Free Frieght in Contiguous USA
Same Day Shipping
Factory Authorized Service
Full Line Distributor

Makita
6095DW 3/8" VSR W/Keyless Chuck & Extra Battery $158
S1030 10" miter saw 229
2012 12" port plane w/dust ch 459
LS1011 10" comp. mitersaw 439
3612BR 3 HP plunge router 165

BOSCH
1581VS Top Handle Jig Saw $129
1582VS barrel grip Clic jig saw 129
1632VSK VS reciprocating saw kit 135
3050VSRK 3/8" VSR kit w/2 batt 128
3283DVS dustless r. orb. sander 95
1273DVS 4x24 VS belt sander 188
1604 1-3/4 hp router 117
1611EVS 3-1/4 hp VS pl. router 229
1370D random orbital sander 225
1370DEVS rdm. orbital sander kit 299

BIESEMEYER
50L12 50" Commercial W/12" Left $295

Emglo
AM78-HC4V 1-1/2 HP Vertical Twin Tank $309
AM99-HC4 NEW 2 hp twin tank 369
045 3/8" x 50 Goodyear hose 20

HITACHI
C8FB 8-1/2" Compound Miter Saw $439
P12RA NEW 12" planer/6" jointer 779
D10DFK 9.6v VSR dr kit w/2 batt 159
C7BD 7-1/4" saw with case 129
M12V 3-1/4 HP vs pl. router 224

RYOBI
AP10 10" Portable Planer $338
JP-155 6-1/8 jointer/planer 308
TS254 10" miter saw w/ct blade 209
RS115 4-1/2" rdm. orb. sander 78
BT3000 10" sliding table saw 549
RE600 3 hp VS plunge router 205
BE321 3x21 VS belt sander 128
JM100K NEW! plate jointer 209

BLACK & DECKER
2694 7-1/4" Super Sawcat W/Brake $148

POWERMATIC
166760 66 Saw 3 HP W/50" Bies. $1699
1791000 #63 Artisan saw w/Vega 699

WEDGE
SMPR-2 2' Pro Rail W/Module & Case $98
SMPR484' level w/module & case 128

Milwaukee
6527 NEW V.S. Super Sawzall $165
6507 VS Sawzall with case 134
0402-1 12 V VSR cdls w/klss ch 163
0234-1 1/2" VSR 0-850 magnum 114
6368 7-1/4" saw w/bl. cs, fnce 135

SKIL POWER TOOLS
2735-04X 12 V 3/8" VSR Drill Kit W/2 Batteries $138
2375-04 12v VSR dr kit w/2 batt 125
1605 plate jointer kit 119
5860 8-1/4" 60° rafter master 169

Panasonic
EY6205BC 12 Volt, VSR Keyless Drill W/Case & Extra Battery $179

PORTER-CABLE
7334 Random Orbital Sander $118
7335 NEW! VS random sander 129
7336 NEW! 6" VS random sander 134
9851 3/8" cdls dr w. keyless chuck 134
555 plate jointer with case 165
5116 NEW 16" Omni jig 260
9345 6" saw boss kit 124
7539 NEW 3-1/4 hp5 sp. pl. router 265
690 1-1/2 hp router 128
7519 NEW 3HP production router 224
7538 NEW 3-1/4 HP pl. router 224
9637 electronic vs tiger saw kit 135

freud
JS100 Jointing System With Case $159

CALL THE TOOL CRIB AT
1-800-358-3096
Box 1716 • Grand Forks, ND • 58206
Send $3.00 For 208 Page Catalog
FAX US YOUR ORDER!
1-701-746-2857
WOOD Sept. 91

TOOL CRIB OF THE NORTH
* Price Includes Rebate!
acme Electric

DOWN BY THE OLD MILL STREAM

An olden-days scrollsaw pattern

Just as these turn-of-the-century youngsters are having fun sailing boats by the water's edge, you'll enjoy scrollsawing their pastime in silhouette. For even more appeal, accent your cutout with painted highlights.

***Note**: You'll need ⅛"-thick hardwood stock or plywood for the cutout and ¾" hardwood stock for the base. Because of the small inside cuts in this project, you'll need a scrollsaw that will accept plain-end blades to get the job done. (We used a #4 blade, .035×.015" with 15 teeth per inch.) Blade holders are available to convert many pin-blade saws to use plain-end blades. Ask your tool dealer.*

Cut a piece of ⅛" solid stock or plywood (we used Baltic birch; basswood also would be a good choice) to 5½×10". Photocopy the full-sized pattern, *opposite page,* and fasten it to the stock with spray adhesive.

Drill 1/16" blade-start holes where indicated on the pattern. Then, begin cutting the sailing scene with the smallest inside details, such as the loop in the girl's bonnet string or the inside cuts on the boat she's holding. Progress to larger details, and cut the outside pattern line last.

Apply a clear finish. Or, for a different look, paint the scene following the color scheme shown in the photo *above*, or one of your own. Watercolors or thinned artist's acrylic paints applied as washes will give your cutout a faded, aged look. We left the boy's face, hands, and leg, and the girl's hand and legs unpainted on our Baltic birch plywood cutout.

For an effective stand, cut a ¾ × 1¼″ piece of hardwood (we chose walnut) to 10″ long. Cut a ⅛″ groove ¼″ deep along the middle of the topside with a tablesaw. If your cutout won't fit the blade kerf, move the fence slightly and make another pass. Round over the top edges with a ¼″ round-over bit in a table-mounted router. Finish the stand with a clear oil finish.

FULL-SIZED PATTERN

Design: Mostly Victorian Design
Photograph: John Hetherington
Illustrations: Jim Stevenson

EARN CASH, PRIZES FOR YOUR TOP SHOP TIP

Do you have a great shop tip (or two) you'd like to share with other *WOOD*® magazine readers? For each published submission, you will get at least $25 from *WOOD* magazine (as much as $200 if we devote a page or more of space elsewhere in the magazine to your idea). You also may earn a woodworking tool for submitting the Top Shop Tip for the issue.

We try not to use shop tips that have appeared in other magazines, so please send yours to only one. We do not return shop tips. Mail your tips, address, and daytime phone number to:

Top Shop Tip
WOOD magazine
P.O. Box 11454
Des Moines, IA 50336-1454

Saw longer boards with assist from pipe clamps

A long, unsupported board end makes crosscutting on your tablesaw tricky, as well as hazardous.

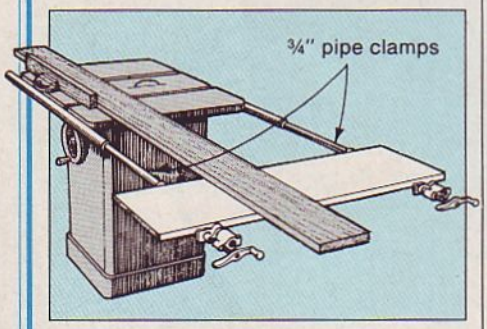

TIP: If your saw has tubular fence-guide rails, make a temporary table extension from two pipe clamps and a suitable board as shown above. Align the top of the extension with the saw table, and position the clamp faces and handles safely out of the way before starting the saw.

—Jim Moss, Fullerton, Calif.

Screwdriver stretches allen wrench's reach

Sometimes, you can't quite reach an allen-head screw with one of those little L-shaped wrenches. And there are times when the wrench will reach, but you can't get enough grip on it to turn.

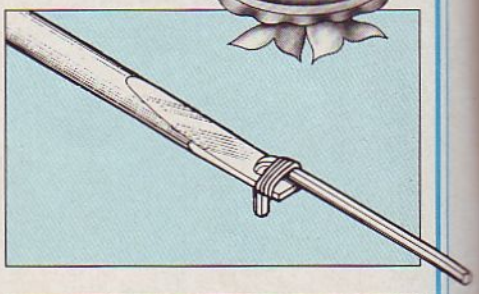

TIP: Get an old screwdriver and drill a hole in the blade to fit the allen wrench. Put the short end of the wrench through and secure it with a rubber band. Now, you can reach into that tight spot, with the screwdriver handle providing a solid grip.

—David Blake, Huntington, W. Va.

For his tip, David receives a Sears Craftsman 8¼" compound miter saw, model 113.234680, *right.*

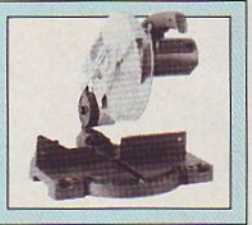

Rubber tubing eases the grip on chuck keys

Skinny steel chuck-key handles really put a dent in your fingers when you put on the pressure. It would be nice if they were a little fatter and a lot softer.

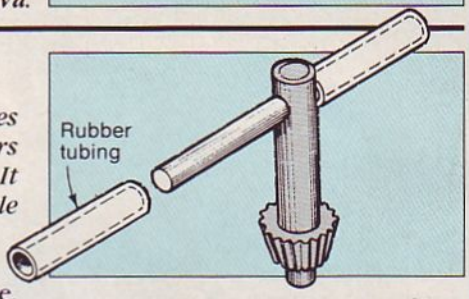

TIP: From an auto-supply store, buy some rubber vacuum or emissions-control tubing that fits the handles. Lubricate the handles with water or soap, and force a piece of tubing onto each for a more comfortable grip.

—Bill Houghton, Sebastopol, Calif.

Staples make sure corners stay square

Miter-cut corners make gluing tough. You get the corners square dry-clamping them, but then they go haywire when you try to assemble them again with glue.

TIP: Square the corners in a strap-type clamp. With everything just right, turn the assembly over and staple each corner. Remove the clamp and spread each joint enough to inject glue into it from the top with a syringe-type applicator. Then, reclamp the frame, which is still square, thanks to the staples. After the glue sets, remove the staples.

—Max Sageser, Earth, Texas

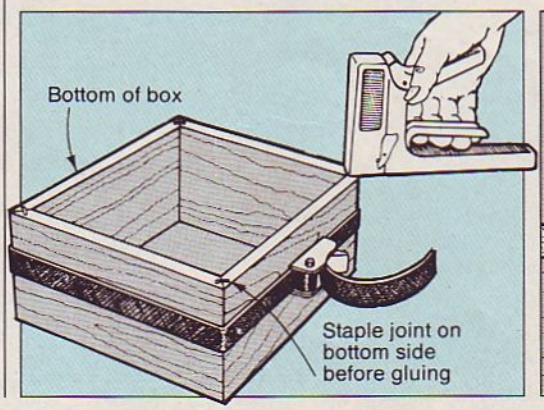

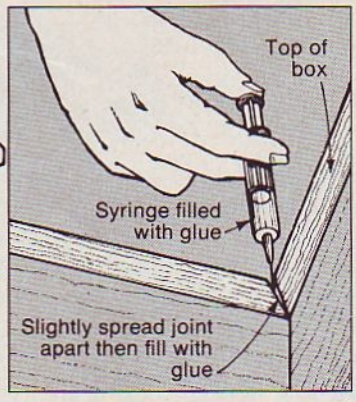

Continued on page 24

Exclusively Performax
Precision Drum Sanders

5 YEAR ANNIVERSARY

Our Customers Say: "You know you really oughta tell people that the Performax really does what you say it'll do."

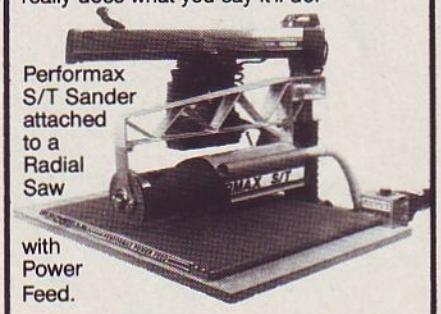

Performax S/T Sander attached to a Radial Saw with Power Feed.

So After 5 Years of Ads, Here Goes: It really is rigid. It really does sand 44" wide in two passes. It really is precise. It really is affordable. It really does have new and really improved abrasive fasteners. It really is the best drum sander money can buy. It really will exceed your expectations.

A REALLY BIG THANK YOU TO ALL WHO MADE THIS ANNIVERSARY POSSIBLE.

For a Free Brochure and the Dealer Nearest You Call
1-800-334-4910
or (612) 895-9922
or write: PERFORMAX PRODUCTS, W1
12211 Woodlake Drive, Burnsville, MN 55337

NOW FROM **ONEWAY**
QUALITY SAFETY PERFORMANCE

Easy to use, high quality, safe, time saving equipment.
That's what you demand.
That's what we supply.

SELF-CENTERING 4 JAW SAFETY SCROLL CHUCK

New locking device• prevents jaw fly out, a common fault with standard scroll chucks. High quality construction ensures long life and smooth jaw action. Holds rounds, squares and doubles as a heavy duty screwchuck.

SMALL PARTS SCREWCHUCK THAT REALLY WORKS*

Ideal for convenient turning of small parts. Design of screwchuck prevents slippage of part. Any No. 6 to 10 (12 with optional faceplate) flathead woodscrew can be used to hold your part.

Our promise to you: **No false claims. Only high quality goods sold. Satisfaction guaranteed, or your money back. *It's that simple.***

To order or for more information, call toll free
1-800-565-7288

4 JAW SAFETY SCROLL CHUCK	179.95
MORSE 1 TAPER SCREWCHUCK	35.95
MORSE 2 TAPER SCREWCHUCK	39.95
OPTIONAL FACE PLATE (AVAILABLE FOR #2 MORSE ONLY)	14.95

FREIGHT PREPAID DEALER INQUIRIES INVITED
* Patent Applied For

TIPS FROM YOUR SHOP (AND OURS)

Continued from page 22

Label your bandsaw to save your tires

If you don't use your bandsaw frequently, you should take the tension off the blade between cutting sessions. Leaving the blade tensioned can cause tire damage and tracking problems. But, saws with the tension indicator inside the cover discourage loosening and then retensioning the blade.

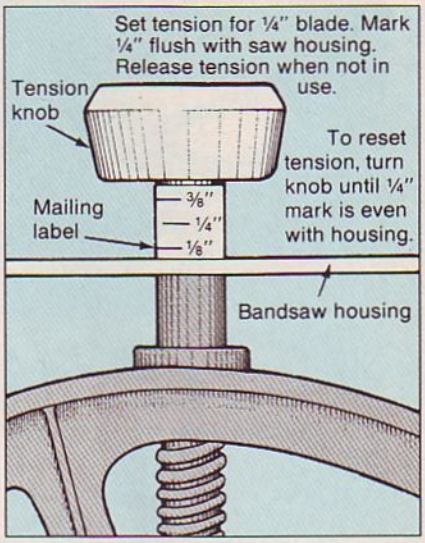
Set tension for ¼" blade. Mark ¼" flush with saw housing. Release tension when not in use.
Tension knob
To reset tension, turn knob until ¼" mark is even with housing.
Mailing label
⅜"
¼"
⅛"
Bandsaw housing

TIP: Stick a gummed mailing label (or a piece of masking tape) to the tension-knob shaft. Set the tension for the blade you're using and make a mark on the label in line with the saw housing. Now, when you're finished cutting, you can release the tension. When you need to set it again, simply turn the tension knob until the mark on the label aligns with the housing. Make separate marks for each blade you use. Whenever you open the cover to change a blade, double-check the marks against the tension scale.

—Pat McDuffie, Richland, Wash.

Altered carriage bolt fits saw table to a T

Fiddling with clamps to secure jigs and feather boards to your tablesaw eats up shop time. And sometimes the clamps don't hold very well anyhow. There must be a better way.

TIP: You can bolt your tablesaw helpers right to the saw table if it has a T-shaped miter-gauge groove. Grind the head of a ½ × 2½" carriage bolt to fit the groove, as shown below. Cut a ½" slot in the feather board (or other attachment) to allow adjustment, install it over the bolt, and secure with a flat washer and wing nut.

—Jim Bloomfield, Saugus, Calif.

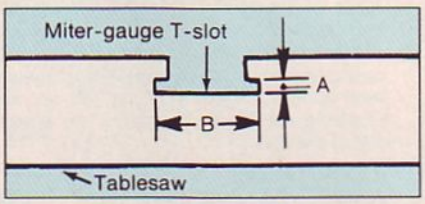

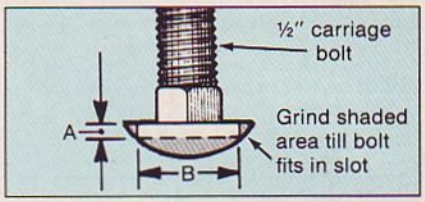

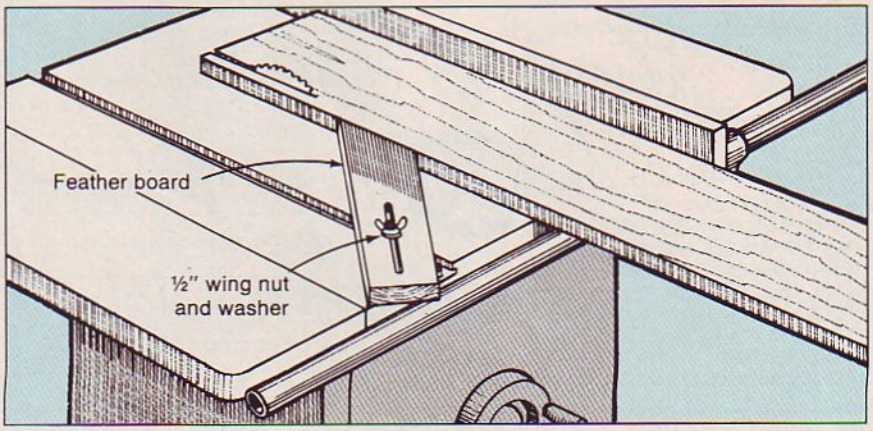

Hole in bench handy for cutting and cleaning

You dread cutting with your sabersaw because of the balancing acts needed to hold the stock.

TIP: Cut a hole in your workbench top like the one shown *below.* Reinforce it with cleats and place a box under the opening. When you have some cutting to do, place your stock with the cutting line over the opening and saw away. The box will catch much of the sawdust, and when you sweep the benchtop, just brush the rest through the hole. Save the cutout, and drill a 1″-diameter hole in it for a finger grip. Then, you can replace the insert when you need a full benchtop.

—C.A. Conway, Benton City, Wash.

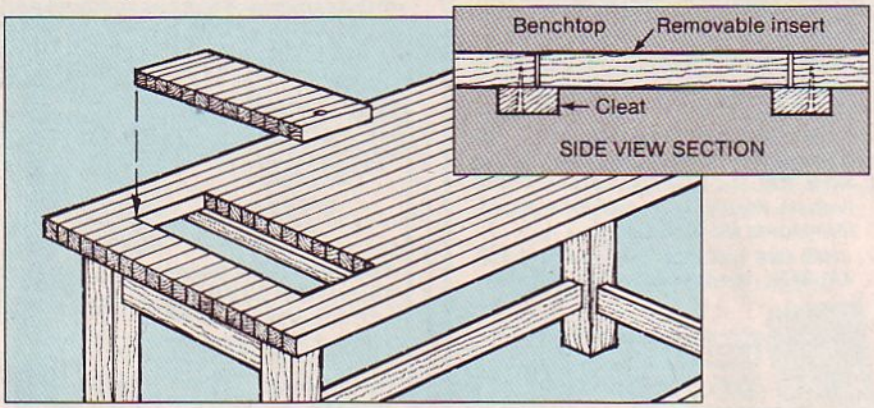

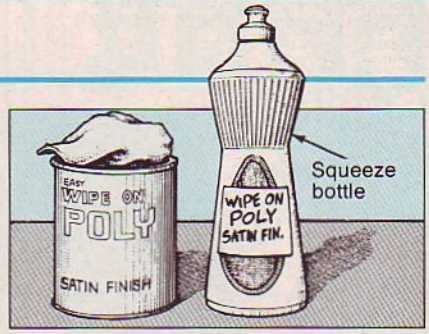

Dish detergent bottle puts the squeeze on messy finish

Wipe-on urethane finish products offer convenience and great looks, but dipping the wiping rag into the can makes a mess.

TIP: After you've squeezed the last of the liquid dish detergent out of its plastic bottle, clean the bottle. Pour in your wipe-on finish. Now, at finishing time, simply pull the spout open and squeeze the right amount onto your rag. Push the spout closed for storage. Be sure to label the bottle.

—Soterios Lallas, Viroqua, Wis.

Continued on page 27

Custom Branding Irons from WOODCRAFT®

Electric Branding Irons feature ceramic-insulated, nickel-chrome heating elements which deliver up to 955°F heat. Heat resistant handle. Rated 125 watts, 120 VAC with 2 wire cord set 4' 6" long. Solid brass heads are individually engraved with 3/16" high capital letters and numbers (except logo/signature model). Please allow 6 - 8 weeks for delivery.

A. Electric Branding Iron.
First line is engraved "HANDCRAFTED BY". Up to 20 characters on second line with copy of your choice.
49D11 HANDCRAFTED BY **$49.95**

Non-electric Branding Iron.
Same as A, except it requires a secondary heat source.
49E12 HANDCRAFTED BY **$39.95**

B. Electric Logo/Signature Branding Iron.
Engraved with your own distinctive design or signature. Send clear black & white camera ready artwork to fit a 1" high x 2¾" wide, 1½" x 2", or 1¾" x 1¾" area. Note: very small details cannot be reproduced.
49D13 complete unit **$175.00**

C. Personalized Electric Branding Iron for up to three lines of your copy. Each line can have up to 20 characters for name & address, a special message, or instructions. All capitals, letters or numbers.
49D14 complete unit **$65.00**

WOODCRAFT®
210 Wood County Industrial Park
Dept 91WI09H
P. O. Box 1686
Parkersburg, WV 26101-1686

To Order, Call Toll-free 1-800-225-1153!
90-Day Unconditional Guarantee! Major Credit Cards Accepted.
FREE Catalog With All Orders! Shipping Charges Extra.
Allow 6-8 Weeks Delivery for Custom-made Branding Irons!
For a FREE Catalog Only, call 1-800-542-9115!

Visit Our Retail Stores in: • Boston • Denver • Minneapolis • Seattle • Detroit • St. Louis •

TIPS FROM YOUR SHOP (AND OURS)

Continued from page 25

Fishing line lands flying blade holders

Blade holders on some scrollsaws fly far and wide whenever you break a blade. Then you end up looking for the holders on hands and knees. Also, a flying blade holder could hurt someone.

TIP: Put those holders on a leash. Attach a fisherman's snap swivel to each blade holder with 4-lb. test monofilament fishing line. Tie a length of line with a loop in one end to the upper saw arm and another to the lower arm. Keep the lines short so they won't tangle in the saw or workpiece. Then, with the blade and holders installed, clip the snap swivels to the loops and saw without fretting.

—George Weber, Brooklyn, N.Y.

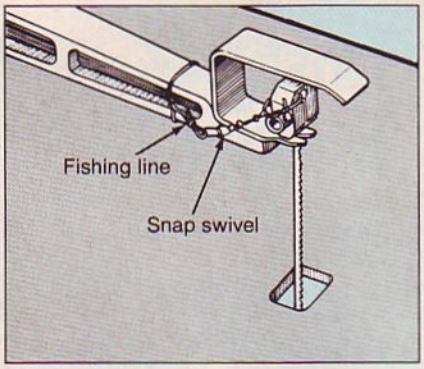

MORE TIPS FROM OUR WOODWORKING PROS

Here are some of the other handy hints you'll find in this issue of *WOOD®* magazine:

- Form decorative furniture trim by following the five-cut sequence shown in the drawing on page 46.
- Space shelf-clip holes accurately with the simple-to-make hardboard template shown on page 47.
- Check out the mortise-forming technique described in the Mortise details accompanying the Leg and Top Side Rail drawing on page 50.
- Make cushioned seats for your furniture projects with our simple instructions on page 53.

RIP SAW

The Portable Sawmill.

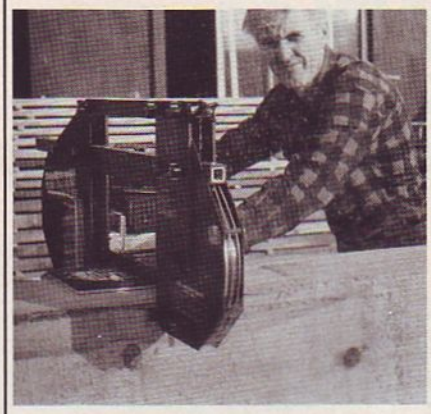

The **"affordable portable"** one man band sawmill. Weighs only 45 lbs. Cuts 20" diameter logs into lumber. Minimum 1/8" to maximum 9" thickness.

Write or call for free brochure.

Better Built CORPORATION

(508) 657-5636

845 Woburn Street, Dept.W, Wilmington, MA 01887

FREE Catalog!

Call TOLL-FREE 1-800-237-5907 Dept.4200

Kits, Plans & Projects You Can Make, And Then Make Uniquely Yours!

Leichtung's new "Pastimes" Catalog will inspire your creativity! It lets you add your personal touch, to turn a plain project into "something special". To get your FREE copy, **call our toll-free phone, mail the coupon, or fax it to 1-216-464-6764!**

☐ Please send me your FREE catalog!

Name

Address

City

State Zip

PASTIMES 4944 Commerce Pkwy. #4200 Cleveland, OH 44128

$300 to replace. $10 to repair.

Use High Performance Wood Filler by Minwax® for the big jobs, indoors and out. Won't shrink, crack or fall out. Hardens and can be worked on in 15 minutes.

If wood is soft or rotted, use High Performance Wood Hardener first to form a rock solid base.

Free booklet: *Tips on Wood Finishing*
Minwax Company, Inc., Dept. WO 091
P.O. Box 426, Little Falls, NJ 07424

High Performance Wood Filler MINWAX

© 1990 Minwax Co., Inc.

Ripping right on a radial-arm saw

I am trying to do some laminating out of maple strips that measure ¼" thick by 1" wide. I have a 10" Craftsman radial-arm saw and have to feed the stock into the saw at a counterclockwise rotation. When I begin feeding the stock into the blade, the first three or four inches raise up, jump, and tear. The rest of the piece goes okay until I get to the last three or four inches. I have the hold-down paws against the wood, but this doesn't seem to help any. I have tried using new blades, but this doesn't help either.

I could use longer strips and cut off the bad ends. But more than anything, this jumping and tearing scares the pants off me.

—Art Andlinger, Edisto Beach, S.C.

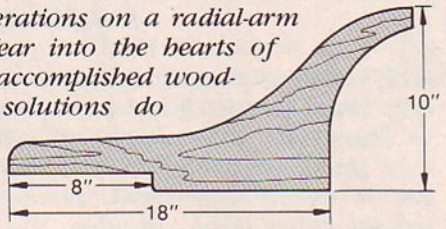

Art, ripping operations on a radial-arm saw can put fear into the hearts of even the most accomplished woodworkers. But solutions do exist. First, try ripping with a thin-kerf saw blade with carbide teeth. This should reduce the hammering effect on the board ends. Our project builder, Jim Boelling, recommends making a special pushstick from plywood scrap like the one shown above. *The extra length of this shop aid will allow you to hold the ends down safely while pushing the material through.*

Getting your own music into a music box movement

I am an unknown, but gifted, songwriter, and my husband and I are both woodworkers. It would be a dream come true for me to own, and be able to make and give to family members and friends wooden music boxes that play my own songs. I was wondering if you can tell me if there are any music box/movement makers that will affordably put an original melody in a movement for me.

—Nancy Learn Peckham, Horseheads, N.Y.

Nancy, if you had written a year ago, we could have provided you with an answer more to your liking — that is, if you had a pot of money to spend on your dream. One year ago, Music Box World, located in Rego Park, NY (800/992-6266) fulfilled orders for those interested in custom-made tunes, shipping their orders to Reuge, a movement maker in Geneva, Switzerland. For a tidy fee of $1,000, Reuge would manufacture an 18-note movement that played the tune of your choice. Because of the incredibly high cost, Music Box World told us this service was discontinued. We know of no other company that still offers this service.

Continued on page 34

EXCLUSIVE DISTRIBUTOR
INDUSTRIAL CARBIDE TOOLING
CASCADE TOOLS, INC.
ASK FOR A FREE CATALOG!

Roundover Bits with Bearing Guide

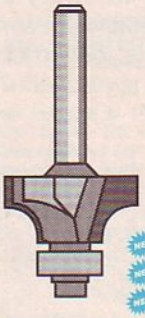

1/4" SHANK — 91C-101

PART	CUTTER DIA. A	CUTTING LENGTH B	OVERALL LENGTH C	RADIUS r	PRICE
C1175	7/8"	3/8"	2"	1/8"	$11.00
C1177	1"	1/2"	2"	1/4"	$12.00
C1179	1-1/4"	5/8"	2-1/4"	3/8"	$15.00

1/2" SHANK

PART	CUTTER DIA. A	CUTTING LENGTH B	OVERALL LENGTH C	RADIUS r	PRICE
NEW C1184	1"	1/2"	2-1/4"	1/4"	$12.00
NEW C1185	1-1/8"	1/2"	2-3/8"	5/16"	$13.00
NEW C1186	1-1/4"	5/8"	2-1/2"	3/8"	$15.00

Double Fluted Straight Bits

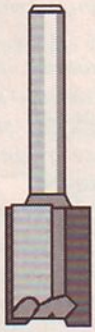

1/4" SHANK

PART	CUTTER DIA. A	CUTTING LENGTH B	OVERALL LENGTH C	PRICE
C1001	1/4"	3/4"	2"	$6.00
C1002	5/16"	11/16"	2"	$6.00
C1003	3/8"	3/4"	2"	$6.00
C1004	1/2"	3/4"	2"	$8.00

1/2" SHANK

PART	CUTTER DIA. A	CUTTING LENGTH B	OVERALL LENGTH C	PRICE
C1008	1/4"	3/4"	2-1/2"	$6.00
C1009	5/16"	3/4"	2-1/2"	$6.00
C1010	3/8"	3/4"	2-1/2"	$6.00
C1011	1/2"	1-3/16"	2-1/2"	$8.00

Dovetail Bits 2 Flutes

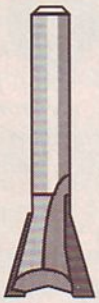

1/4" SHANK

PART	CUTTER DIA. A	CUTTING LENGTH B	OVERALL LENGTH C	ANGLE a	PRICE
C1068	3/8"	3/8"	1-3/4"	8°	$7.00
C1069	1/2"	1/2"	1-3/4"	14°	$7.00
C1071	3/4"	11/16"	2-1/8"	14°	$9.00

1/2" SHANK

PART	CUTTER DIA. A	CUTTING LENGTH B	OVERALL LENGTH C	ANGLE a	PRICE
C1074	1/2"	1/2"	2-1/4"	14°	$7.00
C1076	3/4"	7/8"	2-1/2"	14°	$9.00

Chamfer Bits 2 Flutes

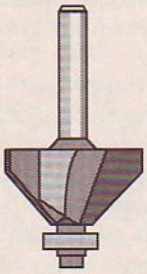

1/4" SHANK

PART	CUTTER DIA. A	CUTTING LENGTH B	OVERALL LENGTH C	PRICE
C1129	1"	7/16"	2"	$12.00
C1130	1-3/8"	5/8"	2-1/4"	$16.00

1/2" SHANK

PART	CUTTER DIA. A	CUTTING LENGTH B	OVERALL LENGTH C	PRICE
C1131	1-1/8"	1/2"	2-1/4"	$14.00
C1132	1-3/8"	5/8"	2-3/8"	$16.00

ORDER 24 HOURS A DAY!
1-800-235-0272
FREE SHIPPING ON ORDERS TOTALING $100.00 or MORE!
MasterCard VISA

ASK WOOD

Continued from page 33

What glues do we use?

I have some questions regarding glues and their holding power. Recently, I tried Franklin Liquid Hide Glue and wasn't impressed at all. Every joint I made using the glue failed. My questions follow:

1. Does Franklin Liquid Hide Glue penetrate the wood so much that it takes a heavier application?
2. Is Franklin Titebond a good glue?
3. Is Elmer's glue a good glue?
4. What type of wood glue should be used on outdoor projects?
5. Which glue does *WOOD®* magazine prefer?

Any information you have on glues would be helpful. Thank you, and keep up the good work.

—Mike McConnell, Hazen, N.C.

Mike, hide glue, regardless of who makes it, contains pretty much the same ingredients and falls under the category of natural animal glues. In this case the ingredients include hides, hoofs, bones, sinews, and flesh of animals such as horses. With dry room temperature conditions, proper clamping, and clean mating surfaces, the glue should perform well and provide a long-lasting bond. In fact, many antique furniture pieces from previous centuries are still around thanks to the merits of hide glue. However, to get quality results, you need to allow for a long set time. Franklin recommends overnight. Moisture also can impact negatively on a joint. And, too, if the product appears thin and watery, you'll need to replace it.

Regarding the Franklin Titebond and Elmer's (questions 2 and 3), we assume you mean both white glue (polyvinyl-acetate resin emulsion) and yellow glue (aliphatic resin glue). Both work extremely well for indoor woodworking projects, particularly, edge and face joining, and biscuit, dowel, spline, and mortise-and-tenon joints.

Though the former offers a longer set time (about an hour), it also remains somewhat elastic and should not be used on high-stress joints. Yellow glue, on the other hand, can withstand a greater temperature range and provide a tough rigid bond. And while water can cause trouble for white and yellow glue joints, the latter of these two remain our top choice in the shop for cabinetmaking and indoor furniture projects.

When building outdoor projects, we prefer epoxy for its waterproof nature and strength. It's also a terrific glue for bonding dissimilar materials.

Fat bits versus skinny bits

My wife bought me a new Porter-Cable router for Christmas. The router can be fitted with either a ¼ or ½" collet. I've noticed in looking through various catalogs that the same-sized router bit (in other words, a ½" round-over bit) can be purchased with either a ¼ or a ½" shank. In my case, I have a choice. Is there a rule of thumb or standard that tells you what shank size you should use for a particular size of router bit? Is bigger necessarily better or safer? Please give me whatever help you can before I go on my buying spree.

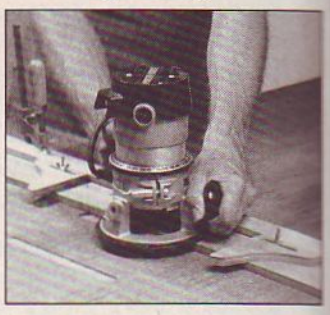

—Jack Dobrian, Albuquerque, N.M.

Jack, unless your task requires a router bit with a very small cutter, or a bit that only comes in the ¼" shank size, you're better off with the larger bit. A ½"-shank router bit resists bending or breaking. The ¼" shank can break, sending a sharp, fast moving cutter head careening. You'll also find that bits with ½"-shanks cost the same or only a little more than those with thinner shanks. And when the time comes to hog off a lot of material using two- or three-horsepower router motor, you'll find bits with ½" shanks the only way to go.

Learning to live with dents in plywood

I would like to make a comment on a shop tip that was in the February 1991 issue. It was under the heading "A steamy solution for wood indentations." I confirm that the solution works well for solid stock, but it falls short for veneered plywood.

I recently made an entertainment center with plywood sides that were bumped during moving. A friend used the shop tip which in this case left a very dark area that won't blend in with the rest of the unit. We don't have any idea about what to do. Do you have any suggestions?

—Len Ermak, Forty Fort, Pa.

Len, according to WOOD magazine's project builder, Jim Boelling, your best bet lies in finding a solid wood patch that contains a similar grain and wood tone as the underlying veneer. But even here, you have a challenge. Next, sand and clean the trouble area. Glue the patch in place, let it dry, and then sand the area smooth. Finally, reapply the finishing steps to allow the area to blend in.

If this sounds like too much trouble, here's another approach. Cover the damaged end with flexible veneer, and then finish to match. Always work on scrap first to test results.

In search of multi-groove dowels

In reading your magazine, I have noticed that you have solved other people's problems beautifully, so I hope you can do the same for me. I am looking for a source of fluted dowels. I have contacted several suppliers with no results. I am looking for dowels like a Grecian column. I'd be very grateful for any help you can provide.

—Don Siegfried, San Francisco, Calif.

Don, you can buy the fluted (or multi-grooved) dowels from Albert Constantine & Son, Inc., 2050 Eastchester Road, Bronx, NY 10461. We recommend that you first call the company at 800-223-8087 and ask for their free catalog.

Hints for your hot tub

I am getting ready to build an indoor square hot tub. All joints will be of spline construction, but in this case, I am not planning to use redwood.

My question is this: would white oak or red cedar be appropriate for this application?

—Peter Bibelhausen, Chippewa Falls, Wis.

Pete, both of your choices — white oak and western red cedar can handle the moisture of an indoor hot tub. But whether applying the wood for a deck or tub enclosure, be sure to coat all surfaces with a protective sealer, such as Thompson's Water Seal or an exterior polyurethane. That's what some of our local hot tub installers recommended. Here, follow the directions on the can, and re-apply over time as needed.

From A to Z

I have been reading your magazine for some months now. I need a nice alphabet lettering guide for scrollsawed signs like those I've seen in shops and amusement parks. I want a set where small p's, q's, and j's don't go below the line and where the letters hang together nicely.

—John Bradley, Alta Loma, Calif.

John, finding the right lettering can throw the most avid sleuths into despair. But sources do exist. We frequently visit our art supply store for letter stencils, and a crafts supply store may a be second choice. Still another source we recently discovered is a ring-bound book called LETTERING FOR WOODWORKERS: A Craftsman's Guide to Design, Layout and Technique. *By Veritas Tools, this publication lets you work from any of nine different typefaces that range in size from ⅜ to 4". You'll likely need to reposition the letters you mentioned to bring them above the line. But if still interested, you can order the book through the Woodworker's Supply by calling 800-645-9292.*

Buy Direct From The Manufacturer And **SAVE!**

Buy 12 "EVER-LAST" Belts... Get 12 Belts FREE!

Need ROLLS, WIDE BELTS, DISCS, SLEEVES, STROKE BELTS, etc. Write for catalog.

Belts available in 36, 50, 60, 80, 100, 120, 150, 180, 220, 320 grit sizes. Please specify grit sizes when ordering, otherwise an assortment will be supplied.

☐ 1" x 30"...$16.50/Doz. + 12 FREE
☐ 1" x 42"...$16.95/Doz. + 12 FREE
☐ 2" x 48"...$25.25/Doz. + 12 FREE
☐ 2½" x 16" $17.95/Doz. + 12 FREE
☐ 3" x 18"...$18.25/Doz. + 12 FREE
☐ 3" x 21"...$19.25/Doz. + 12 FREE
☐ 3" x 24"...$19.75/Doz. + 12 FREE
☐ 4" x 21"...$23.50/Doz. + 12 FREE
☐ 4" x 21¾" $23.75/Doz. + 12 FREE
☐ 4" x 24"...$24.00/Doz. + 12 FREE
☐ 4" x 36"...$28.75/Doz. + 12 FREE
☐ 6" x 48" $37.50/½ Doz. + 6 FREE
Other size belts on request.
☐ Belt Cleaning Stick .....$4.95 each

For Fast Delivery Call Toll Free
1-800-428-2222 (U.S.A.)
1-800-222-2292 (PA only)

9" x 11" PAPER SHEETS
A/O or Garnet Cabinet Paper

	50 PACK	100 PACK
40-D	☐ $17.00	☐ $32.00
50-D	☐ $16.00	☐ $29.00
60-D	☐ $15.00	☐ $27.00
80-D	☐ $14.00	☐ $25.00
100-C	☐ $13.00	☐ $23.00
120-C	☐ $13.00	☐ $23.00
150-C	☐ $13.00	☐ $23.00
No Load Finishing Paper (White)		
120-C	☐ $14.00	☐ $24.00
150-C	☐ $14.00	☐ $24.00
180-A	☐ $11.00	☐ $19.00
220-A	☐ $11.00	☐ $19.00
280-A	☐ $11.00	☐ $19.00
320-A	☐ $11.00	☐ $19.00
400-A	☐ $11.00	☐ $19.00

SHIPPING CHARGES: $4.75 Continental U.S.

☐ MONEY ORDER ☐ CHECK
☐ MASTER CARD ☐ VISA

INDUSTRIAL ABRASIVES CO.
643 N. 8th ST. • READING, PA 19612

Grizzly IMPORTS, INC.
"IMPORTERS OF FINE MACHINERY"

BELOW 1988 PRICE!

You cannot find a better quality machine than this for even twice our price! You will **never** see a price this low again! Features include: • 3 knife cutter head • Magnetic switch • 1-1/2 H.P. motor • Solid steel stand with dust chute • Solid cast iron construction. Many more features too many to mention! See page 21 in our current catalog. *Same high quality machine that we've carried for years!* Weighs 460 lbs.

8" JOINTER MODEL G1018

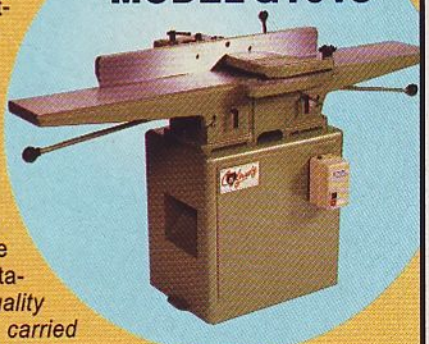

PRICES ARE F.O.B. WILLIAMSPORT, PA OR BELLINGHAM, WA

91-111

REG. $695.00

SALE PRICE $650.00

TO ORDER:

WEST OF THE MISSISSIPPI 1-800-541-5537

EAST OF THE MISSISSIPPI 1-800-523-4777

CITY LIGHTS, COUNTRY SIGHTS

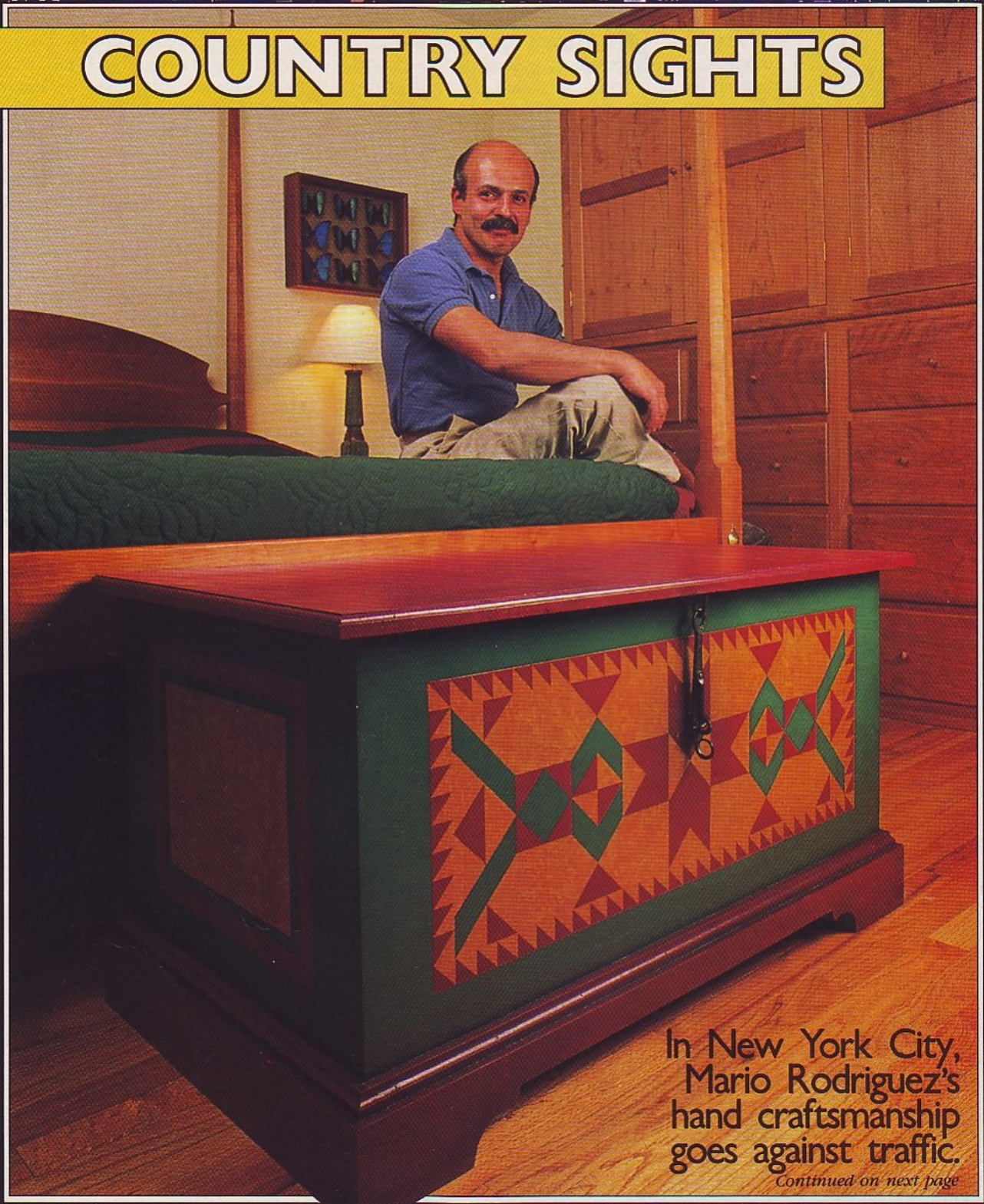

In New York City, Mario Rodriguez's hand craftsmanship goes against traffic.

Continued on next page

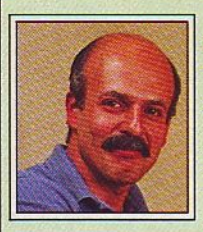

In city bustle, a woodworker really has to hustle. Just ask Mario Rodriguez, who set up shop across the East River from Manhattan a dozen years ago. His business thrives, but keeping up demands the pace of a thoroughbred and the endurance of a draft horse. Tact—plenty of it—helps, too.

That all comes with the turf in the city, though, and it's what Mario strived for. On the way to becoming a top-notch woodworker, he hung drywall during the day and studied art, carpentry, and cabinetry at night. Then there were years of jumping from cabinet shop to cabinet shop for the right experience.

Now, in Brooklyn, the 40-year-old craftsman creates designer furniture for New York's elite, restores antiques for a steady clientele, and creates classic country furniture. Unlike the woodshops of his past, however, Mario's doesn't whine with constant-running tablesaws or thump with pneumatic drivers. He loves the old ways of hand tools and the fine craftsmanship in his country pieces.

Brring. Brring. Brring. Sprinting from the workbench to the phone, the craftsman answers with a professional tone, "Mario Rodriguez, cabinetmaker."

The voice at the other end of the line elicits animation from Mario. He gestures emphatically with his free hand as he explains: "No, not three o'clock, make it five, but yes, you can get it today. And," he adds confidently, "you'll like it a lot."

Replacing the telephone on the wall, Mario walks through the shop to the finishing room at the back of the building. There, assistant Roy Mattia carefully wipes stain on a tabletop.

"Drop that," Mario orders. "We've got to get that leaf done for the Swedish table—and before five o'clock! Skip lunch."

Assistant Roy Mattia hands Mario another Windsor chair for delivery to Manhattan. Behind them, Mario's shop front contrasts with the dingy Brooklyn industrial area.

Always yesterday in the Big Apple

Behind the prim, blue facade on Brooklyn's industrial Manhattan Avenue, it's just another day. Mario doesn't panic at the news of the sudden deadline.

"My work is booked maybe six months ahead," he explains. "If I were somewhere else, I might want to book more, but the key to surviving in New York City is understanding that everybody wants it yesterday. No one will book you six months in advance. And if you always deliver on time, you establish a reputation. Then, there's no end to the work."

On this day, Mario will make good his word again. With but a few supervisory suggestions from his boss, Roy drills and dowels the extension leaf for the table. After drilling mating holes in the tabletop, he dry-fits the piece. Now, the new leaf has to be stained to match—not an easy step for this project.

"You see, this table is made from Swedish pine, with grain unlike any pine we have in this part of the country," Mario says. "The closest we could come was yellow cypress, but its color is way off. Roy can handle that, though."

And Roy does. He wipes down the leaf with a thin wash of brown stain, then removes it with a rag. "Needs some red," he says, surveying his work. A dab of red

pigment goes into the mixture. He stirs the wash, and tries some on a tiny area. It does the trick.

The phone rings, interrupting the work. "What? I said five!" Mario nearly shouts. "It's only about three. Get some coffee." The driver has come for the Swedish table, a full two hours ahead of schedule.

"Get some heat to dry the stain, Roy, then spray it," Mario says. "The pickup's getting coffee."

The phone rings again. Mario talks, then hangs up. "Reprieve," he yells. "The driver's going down to Long Island. He'll get the table on the way back."

Mario smiles faintly. "This is going to be another late night. We've still got 12 Windsor chairs to finish," he says. "I promised them two days from now." He points to the legs, seats, and other miscellaneous parts in the center of the room. "And, I have to steam some backs for another order."

Country furniture made in Brooklyn

When Mario first opened the doors of his shop, he made slick, contemporary furniture and cabinets featuring clean lines and plastic laminates. But the work wasn't entirely satisfying.

"What happened was that I would bid on a job, and not get it," Mario recalls. "I'd tell the client, 'I've read the guy's specs, and this is why he underbid me—particleboard, thin laminates, cutting corners. And quality is why mine costs what it does.' They would reply, 'We appreciate that, but of course, we really do have to go with the lower bid.'

"So, I started using more expedient and economical methods. Then, though, it became too much like work, and I didn't want to do it because I always want to produce the best that I'm capable of." The one area that allowed Mario to do that, and gave him an honest return, was antique restoration. "With antiques, people have a certain amount of money invested in a piece. Fifty or one hundred dollars isn't the issue. Rather, it's 'Can the guy do the job correctly?' "

Restoration also allowed Mario to work more with the hand tools he was learning to use and admire, as well as to study the colonial-style, country furniture he longed to build. "The profitable work subsidized my other interests," he says. "Like planemaking and the Windsor chairs. When I started making the chairs, Michael Dunbar hadn't written any of his books. There was nothing written. I had to dig around and look at old ones [chairs], and do lots of experimenting."

His experiments paid off, because today, besides building custom pieces for some of New York City's finest interior designers, it's

Continued

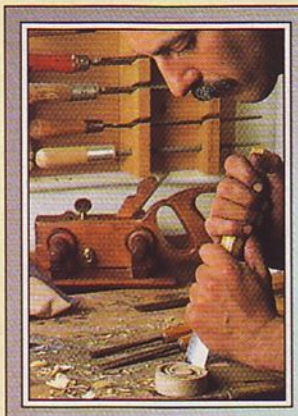

Mario's handcrafted Connecticut comb-back chair stands about 40" tall and sells for $650. *Inset.* Mario prefers the feel of hand tools. Here, he works on the arm of a chair. The plane sees shop use, too.

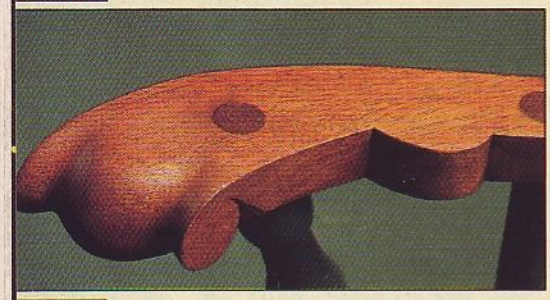

The handcarved arm knuckle of a Windsor chair fits both form and function. "It actually feels good," says Mario.

Below. Dovetails, fine stock, and hand-forged hardware add up to beauty. *Right.* Decorated blanket boxes are "a modern treatment of the traditional."

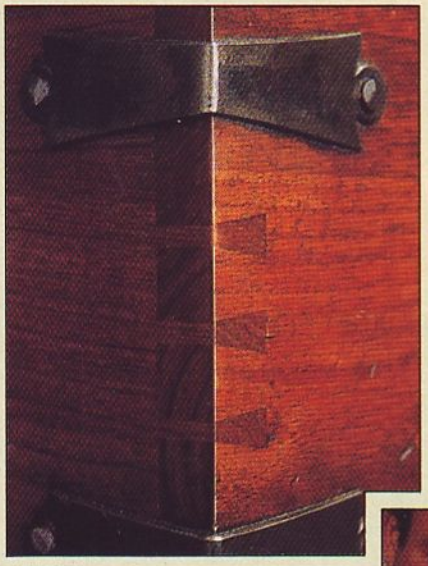

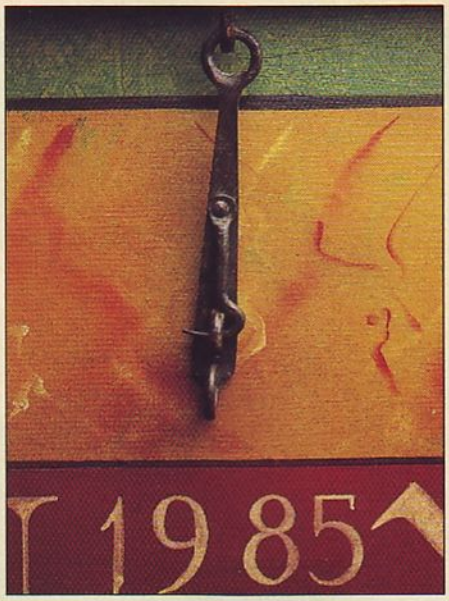

Mario's colonial country classics that make a real difference. "I try to promote the things that set me apart from all other woodworkers in the city, such as the Windsor chairs and the blanket boxes with their dovetails," he says.

These pricey items aren't affordable to many people, though, according to Mario. While television star Mary Tyler Moore has purchased some of Mario's pieces, he admits the price tags immediately scare a lot of potential buyers off.

"The chairs I make sell for $600–$1,300 apiece," Mario notes. "But they're completely hand-built, from the seat which is shaped with a scorp, to the deeply carved knuckle on the arms."

Mario's painted blanket boxes average about $2,600 apiece. A clear-finished box made of chestnut, hickory, and butternut costs $3,500 because of the original-type hand-forged hardware and the elegant, hand-cut dovetails.

Says Mario, "I tell people to come to me if they've seen an elegant Pennsylvania Dutch example in a museum or somewhere. I suggest they get photos and dimensions and bring them to me. That museum piece is worth $25,000, and they'll probably never own it. Yet, I'll reproduce it for $5,000 or less. However, I'm also willing to work with designers on a budget who want a simple blanket box to use as a coffee or end table, or for storage."

Below left. "Hand-cut dovetails are more attractive than machined ones," notes Mario, "because you can make thinner pins." *Below right.* A bench-style carving knife cleans up the dovetails. Such handwork explains the $3,500 price.

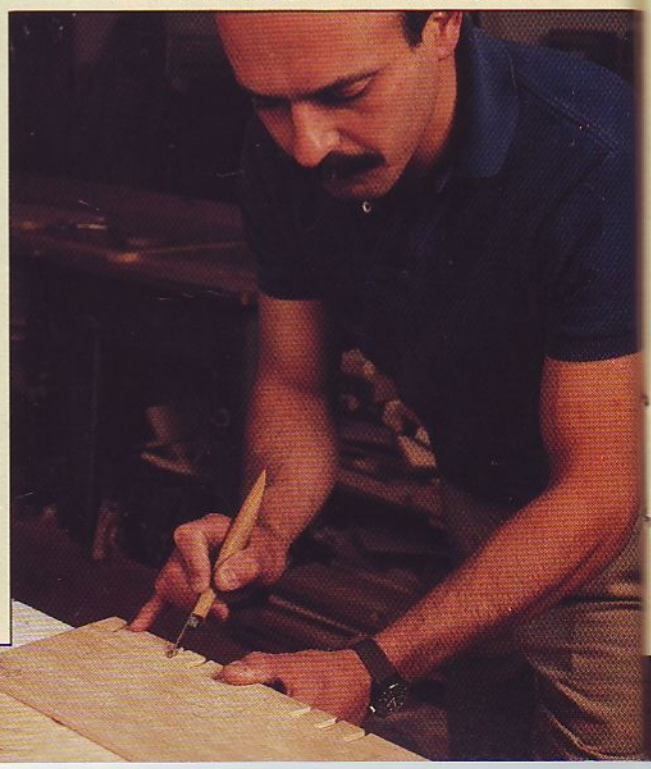

Tricks for the carriage trade

There's no sign outside Mario's shop indicating what goes on within. That's a trick to keep away drop-ins with small furniture repairs and unannounced visits by passersby. Inside, though, the craftsman has developed lots more tricky techniques.

"I had an order from a designer for a huge oval banquet table that would seat a dozen people, plus sturdy bow-back chairs to go with it, all to be painted." Mario says. "The catch was that it had to look like it had 200 years of use. But, achieving that happens to be a specialty of mine."

For the massive 80×138" top and turned legs, Mario went to Connecticut for old-growth pine. "I couldn't get furniture-quality lumber here in large dimensions," he says. It was the finishing, though, that was the biggest challenge of the project.

The top was first painted a flat red. Then, to simulate centuries of wear, it was lightly sandblasted around the edge, as if thousands of elbows had taken their toll. But, where the paint was blown away, the new, raw wood glared nakedly. "To age it, I used a wash of white vinegar in which I'd placed some rusty nails weeks before," he comments. "The mixture, browned corrosion, darkened the wood just enough, and gave it the look of ages." For that effort on the table and chairs, Mario gleaned nearly $18,000, and undoubtedly some exposure in the fashion press.

Mario has also perfected a convincing paint-crackling technique as well as one that simulates a finish that's been painted, worn, then repainted in different colors over a century. According to the city-savvy woodworker, pieces also can be aged just by setting them up on the roof. There, industrial smoke, vehicle exhaust, and other metropolitan fumes, as well as the weather, do the work.

Through his experimentation, Mario has also learned some noteworthy construction techniques, especially regarding chair making. "For the Windsors, I have to have green red oak. I get that out in the country near the Jersey line where they're clearing lots for houses," he says. "For about $60, I can get an 8' veneer-quality log, quarter it, and bring it back on top of my van."

Mario keeps the log green for several months by wetting it down with damp rags, then wrapping it in plastic for storage in the basement. What doesn't get used goes in the wood stove in his living quarters above the shop.

To bend the red oak backs for Windsor chairs, Mario constructed a steamer of 6"-diameter plastic drainage pipe, as shown, *above right*. Steam comes from a portable wallpaper steamer. After two hours of steaming, the oak backs are clamped into a bending jig where they dry to shape.

"I've learned a little about bending the wraparound arms, too," notes Mario. "After steaming, I pull them into a curve just a bit oversized from what I want the final shape to be. Then, I hold them there by tying the ends together with cord. As the wood dries, it forms a tighter curvature that proves just about right. You see, it's easier on the wood, and creates better tension, to pull the wood into a tighter curve than to open up a curve that's too tight."

Mario's feeling for the wood and his love for hand craftsmanship results in attractive and durable furniture. In fact, his work even grabbed the fancy of a national magazine that features homes with a country flair. But, as Mario recalls, the story somehow got shelved. "I guess they thought their readers would rather see articles about a doctor, lawyer, or corporate executive who left the city for the country," Mario says offhandedly. "People don't want to read about an inner-city cabinetmaker crafting country furniture in Brooklyn."

Steaming the green red oak needed for chair arms and backs goes quickly in the 6"-diameter plastic drainpipe connected to a commercial wallpaper steamer.

Written by Peter J. Stephano Photographs: David Arky, Charles Lewis, Steve Uzzell

AT-YOUR-SERVICE

SHAKER-STYLE

Though the Shakers built their furniture with solid wood and through dovetails, I think they'd feel right at home with the styling of our much simplified cherry buffet. For reasons of cost, stability, and ease of construction, I designed our cabinet carcass with plywood framed in solid cherry. I also traded in the original box-on-the-floor look for a complementary base that's compatible with many of today's decors.

A. R. Downing Design Editor

BUFFET

Start with the carcass

1 Rip and crosscut the cabinet top (A), bottom (B), end panels (C), fixed shelves (D), and divider (E) to the sizes listed in the Bill of Materials from ¾" cherry plywood. For ease in laying out and cutting, see the Cutting Diagram for our layout.

2 Cut or rout the rabbets and dadoes in pieces A, B, C, and E where dimensioned on the Exploded View and Part View drawings. (We used our tablesaw and a dado blade.)

3 Dry-clamp the pieces to check the fit; trim if necessary. Now, glue and clamp the pieces, checking for square.

4 Measure the opening and cut the ¼"-plywood back (F) to size.

5 Cut the center support (G) to size. Then, mark and cut the notch along the bottom edge where shown on the Exploded View drawing. Glue it in place directly under the divider (E).

Now, add the face frame

1 From solid ¾" cherry stock, cut the bottom rail (H), stiles (I), top rail (J), mullion (K), and center rails (L) to the sizes listed in the Bill of Materials.

2 Dry-clamp the face frame together. Measure the length and width of the clamped-up face frame and compare to the assembled cabinet; they should be the same. The bottom of the face frame sits ¼" above the ends (C) where shown on the Side View Section drawing on the next page. Mark the dowel-hole location centerlines across each joint. See the Face Frame drawing and accompanying Dowel Hole detail for reference. Remove the clamps.

3 Using a doweling jig and the marked centerlines, drill ⅜" holes 11/16" deep for the dowel pins.

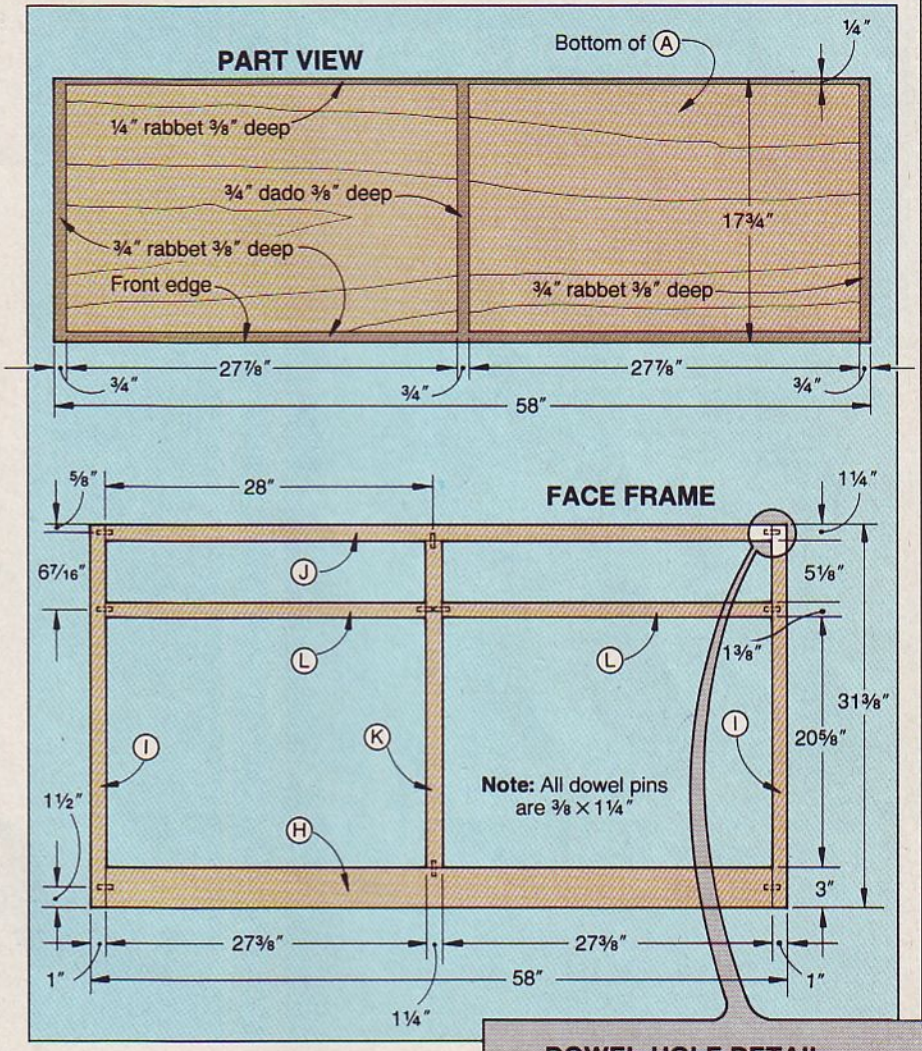

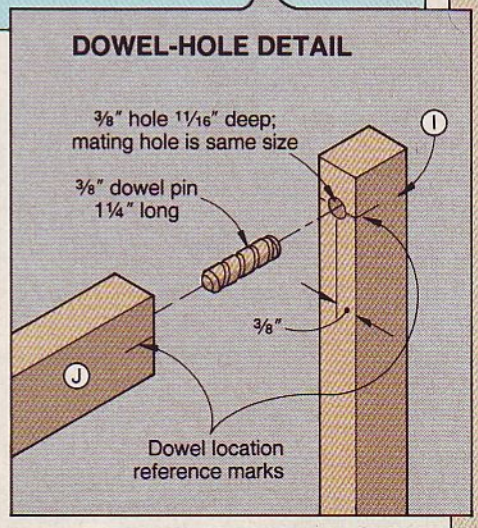

4 Glue, dowel, and clamp the frame, checking for square. Later, remove the clamps and excess glue. Sand the front and back of the face frame smooth.

5 Glue and clamp the face frame to the cabinet as shown in the photo on page 44.

Apply the trim

1 Cut one piece of ¾" cherry to 3¼" wide by 61" long for the front trim pieces (M, O) and two pieces 3¼" wide by 20" long for the side trim pieces (N, P).

Continued

BUFFET

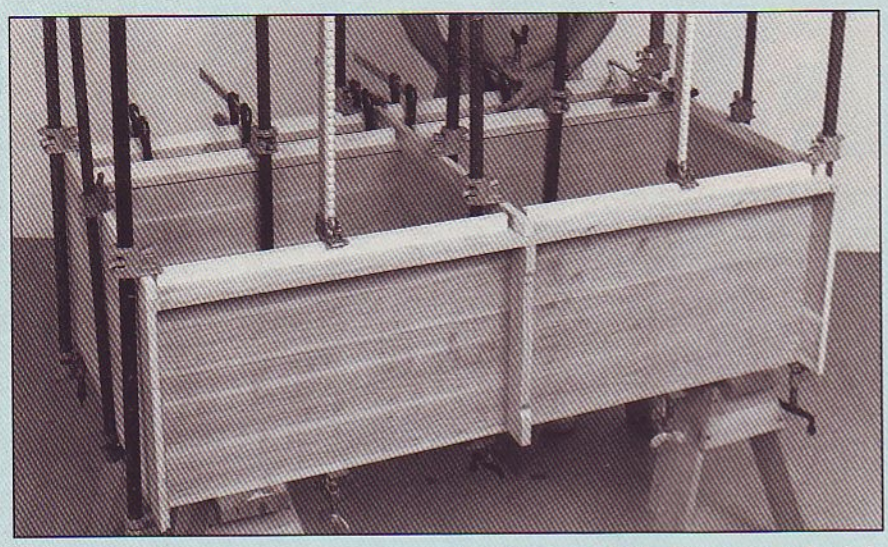

Using over a dozen bar clamps, our project builder rests the buffet on its back while gluing and clamping the face frame to the carcass.

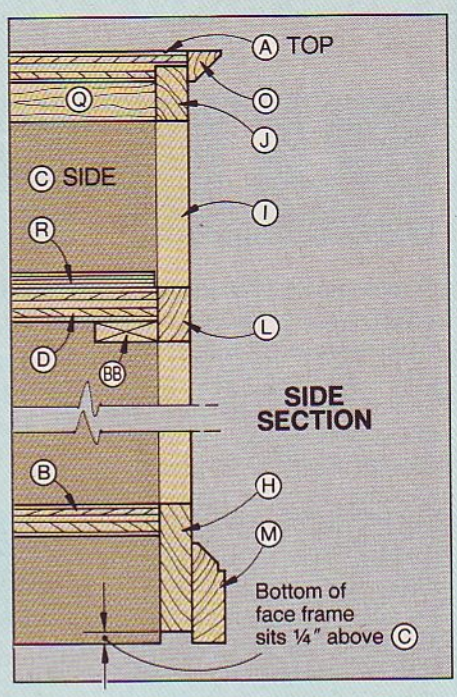

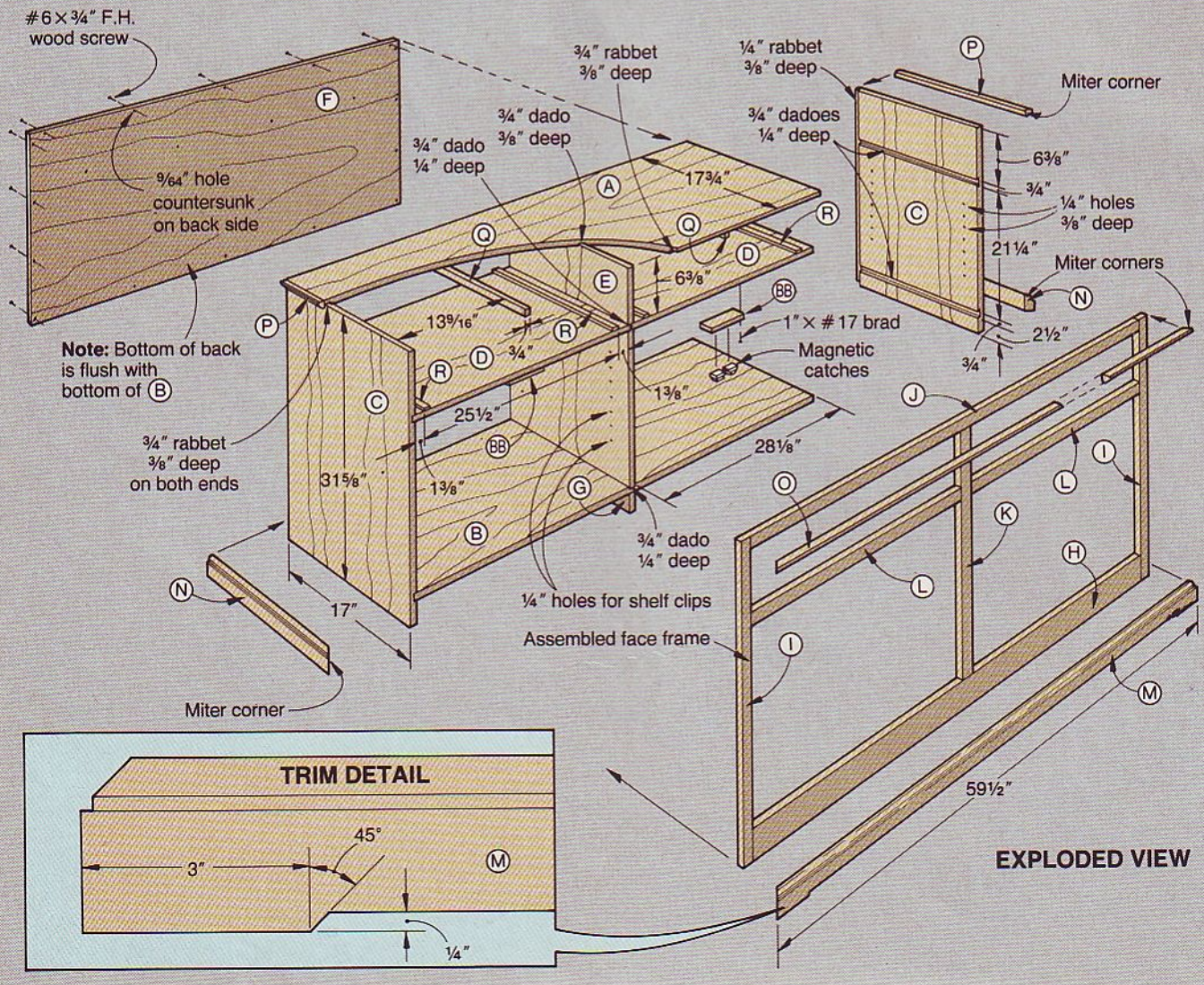

Bill of Materials

Part		Finished Size* T	W	L	Matl.	Qty.
CARCASS						
A	top	¾"	17¾"	58"	CP	1
B	bottom	¾"	16¾"	57"	CP	1
C	end panels	¾"	17"	31⅝"	CP	2
D	fixed shelves	¾"	16¾"	28⅜"	CP	2
E	divider	¾"	16¾"	28⅝"	CP	1
F	back	¼"	29⅛"	57¼"	CP	1
G	center support	¾"	2½"	17"	C	1
FACE FRAME						
H	bottom rail	¾"	3"	56"	C	1
I	stiles	¾"	1"	31⅜"	C	2
J	top rail	¾"	1¼"	56"	C	1
K	mullion	¾"	1¼"	27⅛"	C	1
L	center rails	¾"	1⅜"	27⅜"	C	2
TRIM						
M*	bottom front	¾"	2¼"	59½"	C	1
N*	bottom sides	¾"	2¼"	18½"	C	2
O*	top front	¾"	¾"	59½"	C	1
P*	top sides	¾"	¾"	18½"	C	2
DRAWERS AND GUIDES						
Q	kickers	¾"	⅞"	16¾"	C	2
R	runners	¾"	¼"	16¾"	C	4
S	fronts	¾"	5⅝"	27⅞"	C	2
T	sides	½"	4¾"	17"	C	4
U	backs	½"	4⅛"	26⅛"	C	2
V	bottoms	¼"	15⅞"	26⅛"	CP	2
DOORS						
W	stiles	¾"	2"	21⅛"	C	8
X	rails	¾"	2"	10⅞"	C	8
Y*	panels	½"	10 13/16"	18 1/16"	EC	4
SHELVES						
Z	shelves	¾"	15¾"	27¾"	CP	2
AA	fronts	¾"	⅜"	27¾"	C	2
MOUNTING BLOCKS						
BB	blocks	⅝"	1½"	5"	C	2

*Initially cut parts marked with an * oversized. Then, trim each to finished size according to the how-to instructions.

Material Key: CP—cherry plywood, C—cherry EC—edge-joined cherry

Supplies: #6×¾" flathead wood screws, ⅜" dowel pins 1¼" long, 1"×#17 brads, ⅜" inset hinges (we used Stanley 1535 semi-concealed 2" cabinet hinges; color US10A), shelf clips, magnetic catches and strike plates, finish.

Cutting Diagram

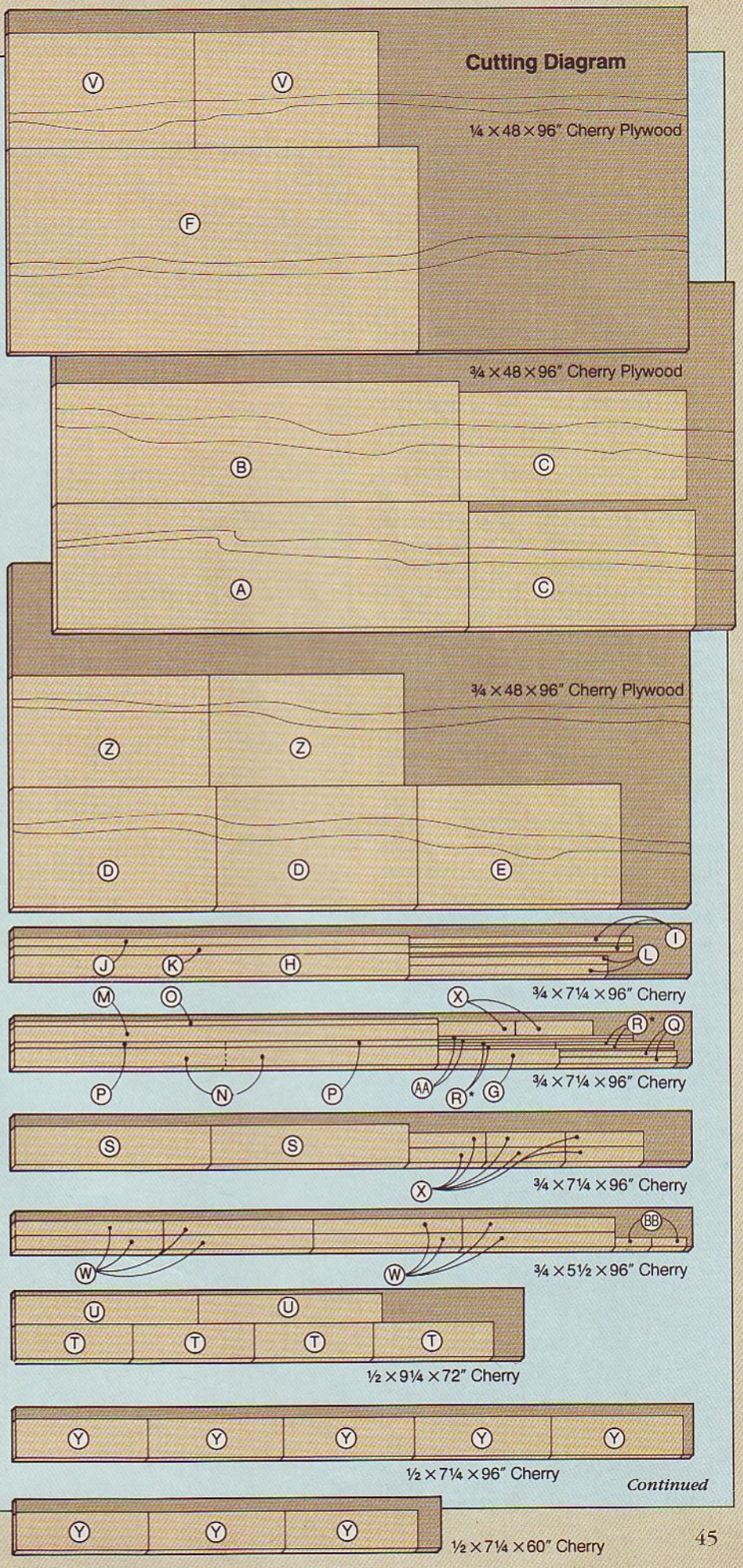

Continued

BUFFET

2 Follow the five-cut sequence shown in the drawing at *right* to form the decorative front trim pieces (M, O) from the 61"-long piece and the side trim pieces (N, P) from the 20"-long pieces. (We tested each cut first on a piece of scrap stock.)

3 Miter-cut the front and side trim pieces to length. Next, mark the notch on the bottom of the front trim piece (M) using the Trim detail accompanying the Exploded View drawing for dimensions. Cut the notch with its angled ends to shape. (We marked the notch, cut just outside the marked line with a jigsaw, and then sanded to the line.)

4 Glue and clamp the trim pieces to the cabinet. As shown in the Side Section drawing accompanying the Exploded View drawing, the front trim piece sits ¼" below the bottom edge of face-frame member (H) and flush with the bottom edge of the cabinet side pieces (C).

The guide parts and drawers come next

1 Cut the kickers (Q) and runners (R) to size. Glue and clamp them to the cabinet where shown on the Exploded View drawing.

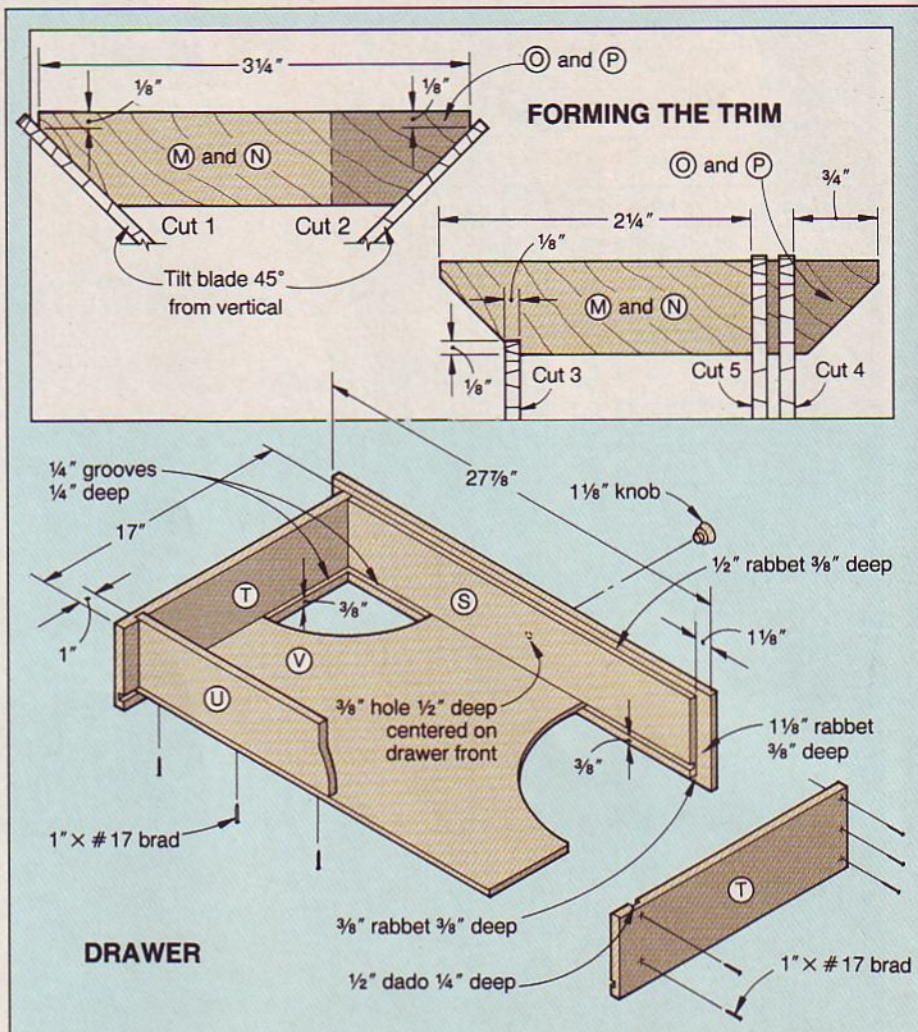

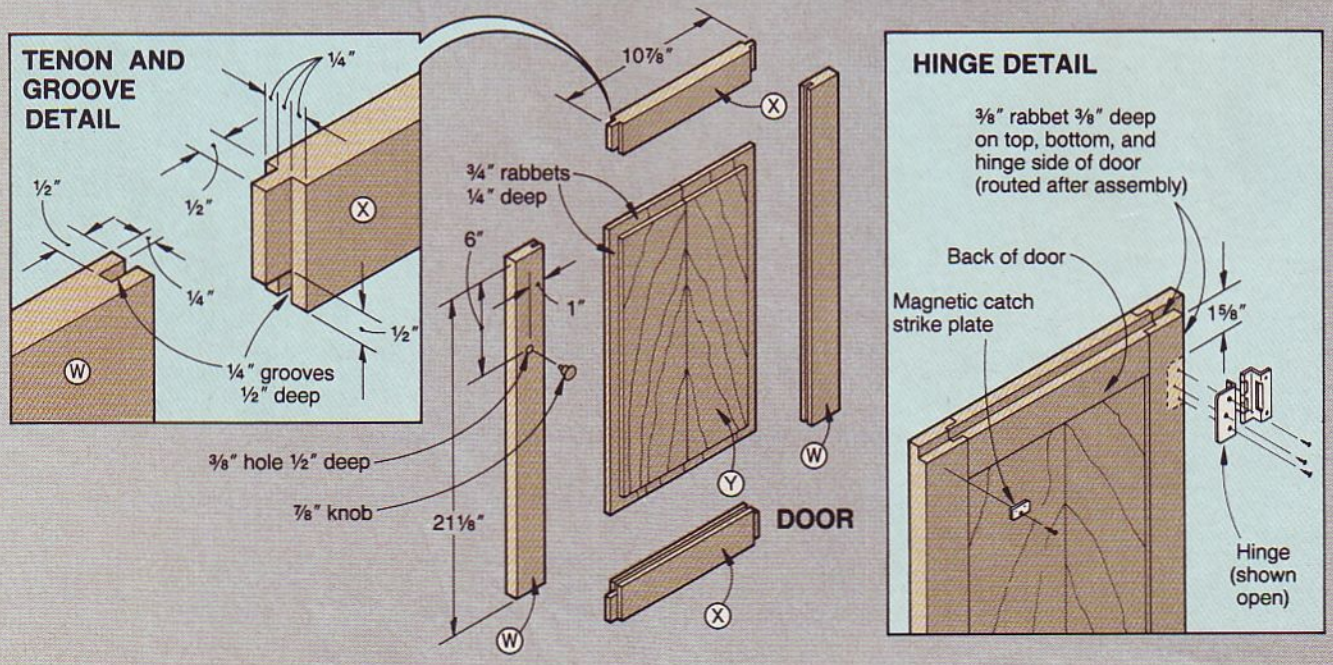

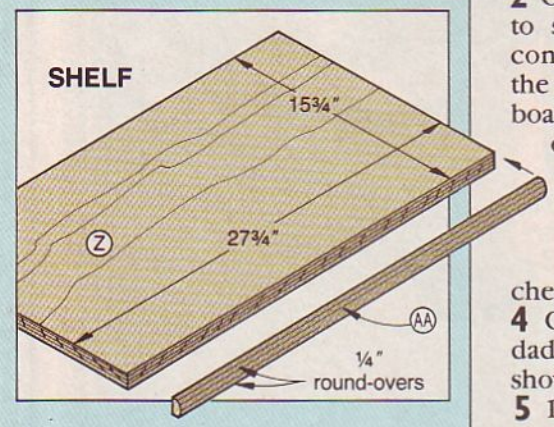

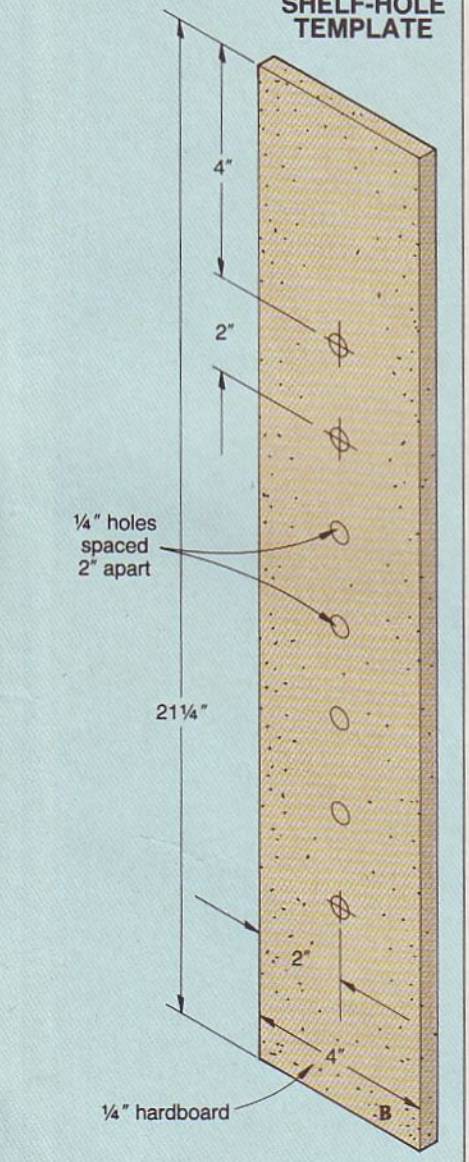

2 Cut the two drawer fronts (S) to size from ¾" cherry. (For a continuous grain pattern across the fronts, we cut them from one board, end to end, where shown on the Cutting Diagram.)

3 From ½" cherry, cut the drawer sides (T) and backs (U) to size. Cut the drawer bottoms (V) to size from ¼" cherry plywood.

4 Cut the rabbets, grooves, and dadoes in the drawer parts where shown in the Drawer drawing.

5 Dry-clamp each drawer to check the fit. The bottom edge of the drawer front sits ⅜" lower than the bottom edge of the sides.

6 Locate the centerpoints on each drawer side, snip the head off a 1" brad, and use the brad as a bit to drill pilot holes. Glue and nail the drawers, checking for square.

7 Mark the centerpoints for the pulls. Drill ⅜" holes ½" deep centered on each drawer front.

Time to construct the doors

1 Cut the stiles (W) and rails (X) to size. Cut or rout a ¼" groove ½" deep along one edge of each rail and stile where shown on the Tenon and Groove detail accompanying the Door drawing.

2 Cut a ½"-long tenon on each end of each rail.

3 Cut four pieces of ½" cherry to 10⅞ × 18⅛" for the panels (Y). (To achieve the 10⅞" width, we edge-joined narrower stock.) To form the cathedral-grain pattern shown in the opening photo see the Shop Skills article on page 48.

4 Cut ¾" rabbets ¼" deep along the front edges of each panel where shown on the drawing.

5 Test-fit the door pieces; the panel should be 1/16" undersized in each direction to allow it to expand. Glue and clamp the stiles, rails, and panel for each door. Allow the panel to float inside the frame *without* glue.

6 Cut or rout ⅜" rabbets ⅜" deep along the back outside edges of the door (except the inside edge) where shown on the Hinge detail.

Add the shelves, hardware, and then the finish

1 Cut the shelves (Z) and shelf fronts (AA) to size. Glue the fronts to the shelves with the top surfaces and ends flush.

2 Rout a ¼" round-over along the top and bottom outside edges of each attached front where shown on the Shelf drawing at *left*.

3 Cut a strip of scrap stock 4" wide by 21¼" long for the hole template. (We used a piece of ¼" tempered hardboard.) Mark a centerline, and drill ¼" holes where dimensioned on the Shelf-Hole Template drawing. Now, mark a B on the bottom end; this will prevent you from inadvertently flopping it end for end.

4 Using the template on the inside of the cabinet, drill the ¼" shelf-clip holes ⅜" deep. See the Exploded View drawing for hole location. (We used a stop on the drill bit to prevent drilling through the cabinet sides.)

5 Add the hinges to the doors where shown on the Hinge detail. Now, with the top and bottom edges flush, and an even gap between each pair of doors, fasten the hinged doors to the cabinet.

6 Cut the mounting blocks (BB) to size, and glue and brad them to the bottom side of the shelves (D). Add the magnetic catches to the mounting blocks, and fasten the strikes to the door backs.

7 Mark the centerpoints, and drill the holes for the Shaker pull knobs in the doors.

8 Remove the hardware. Sand the cabinet, drawers, and doors smooth. Add the finish to all parts, including the Shaker knobs, being careful not to get any finish into the holes for the knobs.

9 Attach the hardware, and glue the knobs in place.

Buying Guide

- **Cherry shaker knobs.** Two 1⅛" knobs and four ⅞" knobs, kit #WMB1, $5.95 ppd. Smith Woodworks, Box 42, RR 5, Califon, NJ 07830. No phone orders.

Produced by Marlen Kemmet Project Design: James R. Downing Photographs: Hopkins Associates Illustrations: Kim Downing; Mike Henry

HOW TO CREATE MADE-TO-MATCH CABINET PANELS

Eye-catching cabinet panels that match each other in a cathedral or "V" pattern, such as the doors of the cherry buffet on page 42, don't happen by accident. Such results require simple, upfront planning. What's the trick? To begin with, you need to construct the panel from two or more boards. Here's how to go about it.

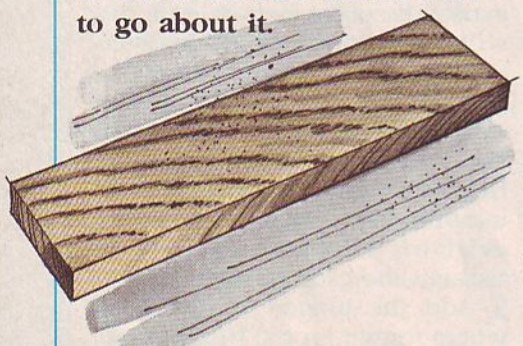

1 Select boards with relatively straight grain lines that run diagonally from edge to edge such as the one shown in the illustration *above*.

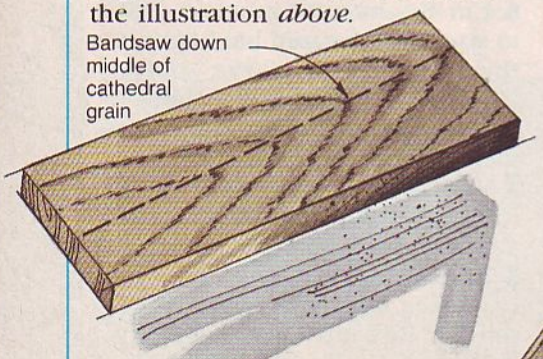

2 If you can't find enough of these boards, you may have to make your own from other boards. For example, you could use a cathedral-grained board such as the one shown *above* and bandsaw it down the middle of the cathedral pattern. Then, straighten the bandsawed edges on a jointer to get two usable boards with diagonal grain.

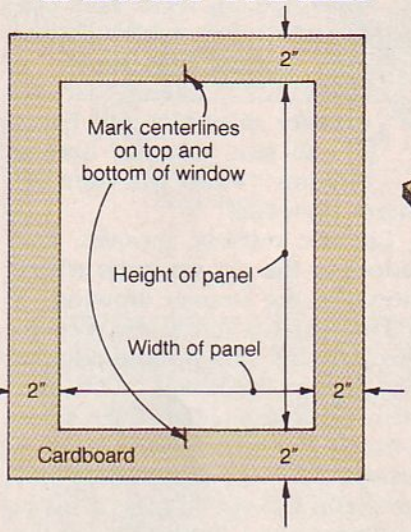

3 Now, cut out a "window" in a piece of cardboard or hardboard to the dimensions of your panel as shown *above*. Allow a 2" border around the window, and mark centerlines at the top and bottom.

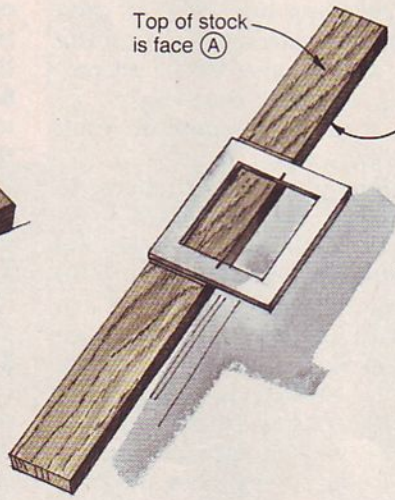

4 Place the window over an attractive portion of the stock, and align the window centerlines with the edge of the workpiece. Mark the board (with a pencil) along the outside edges of the window. See illustration *above*. Crosscut the board along these lines.

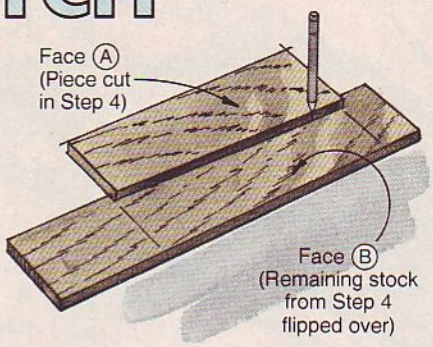

5 Flip over the remaining piece(s) of stock, and slide one of these pieces along the edge of the trimmed board to find the best grain match. You may have to overlap the trimmed board on the other board and angle it as shown *above* to symmetrically match up the cathedral peaks. With the match made, mark the untrimmed board for length. If you need to overlap the untrimmed piece, mark on the top face of the bottom board, running a pencil along the edge of the trimmed board.

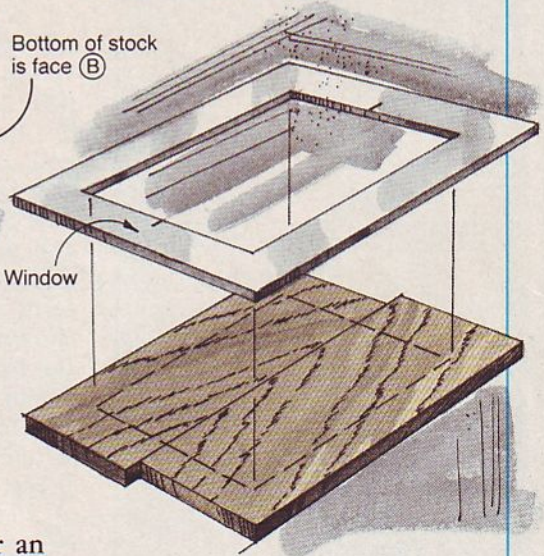

6 Apply glue and edge-join the two pieces of stock. Then, place the window frame over this workpiece, positioning it for the best appearance. Mark the panel location along the inside edges of the frame. Cut the panel to size.

Illustrations: Kim Downing; Jim Stevenson

BOTTOMS-UP BARSTOOLS

THE BEST SEATS IN THE HOUSE

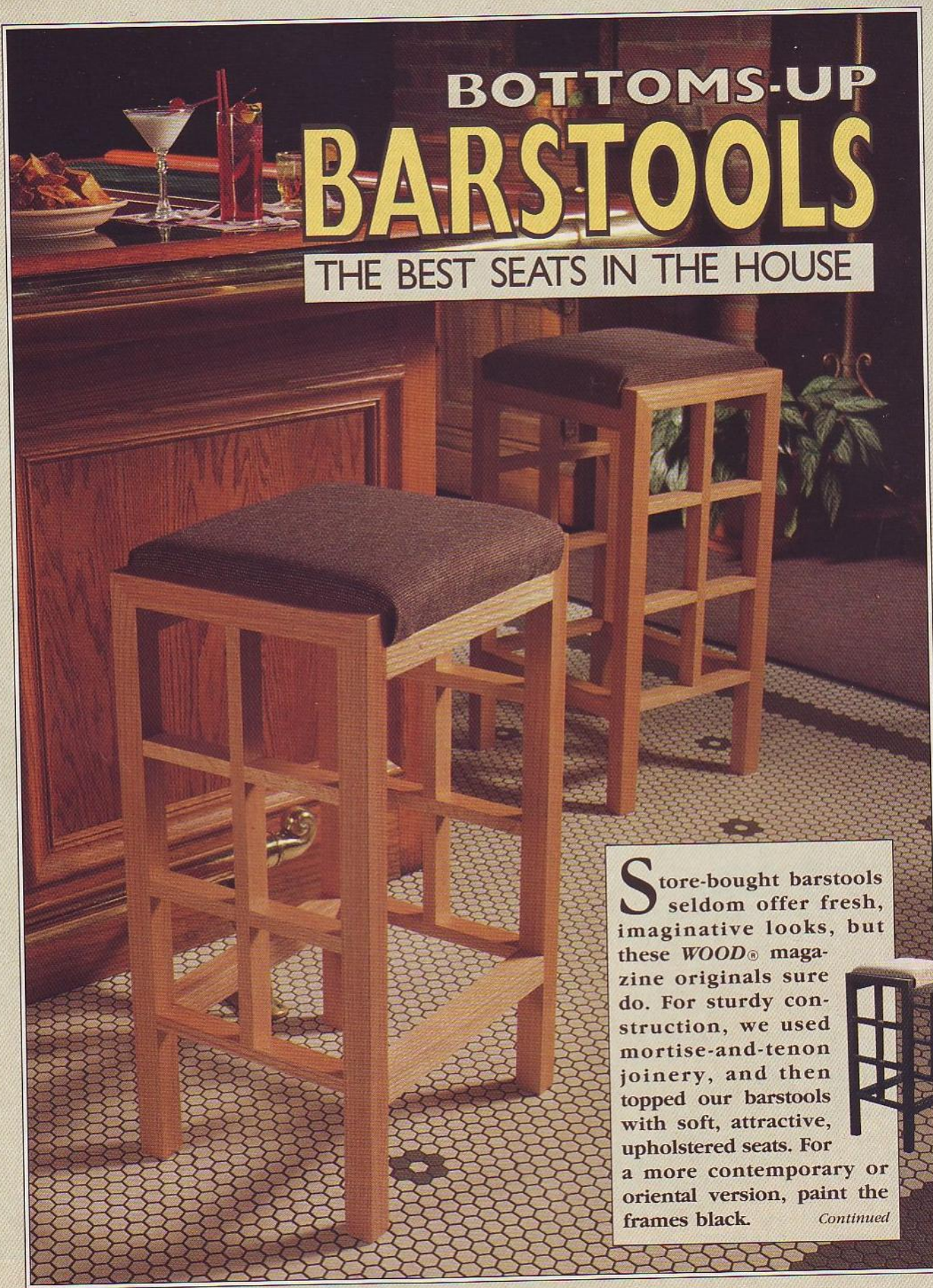

Store-bought barstools seldom offer fresh, imaginative looks, but these *WOOD*® magazine originals sure do. For sturdy construction, we used mortise-and-tenon joinery, and then topped our barstools with soft, attractive, upholstered seats. For a more contemporary or oriental version, paint the frames black.

Continued

Note: We specify the dimensions for a 30"-high stool intended for a 42"-high wet bar. For comfortable seating at a breakfast bar (normally 36" high) use the dimensions in blue on the Leg and Side Rail and the Side Assembly drawings.

First, laminate to form the 1½"-thick stock

1 Cut two pieces of ¾"-thick oak to 1⅝" wide by 31" long for each leg (A)—eight pieces per stool. Now, cut two pieces 1⅝ × 15" long for each top rail (B), and two pieces 1⅝ × 17" for each stretcher (C). (See the Exploded View drawing on the opposite page for reference.)

2 Glue and clamp matching pairs of cut pieces together face-to-face with the edges and ends flush for each leg, rail, and stretcher.

3 Scrape the glue from one edge of each lamination, and joint the scraped edges flat. Position the fence on your tablesaw 1½" from the blade, and cut the edge opposite the jointed edge to trim the pieces to 1½" wide. If your initial stock measured a fraction over ¾", rotate the stock 90°, and rip one edge for 1½"-square stock.

Machine the pieces for the side assemblies

1 Trim one end of each leg (A) flush and square. Next, miter-cut the opposite end of each leg at 45° for 29"-long legs. (We used a stop to ensure uniform length from leg to leg.)

2 Miter-cut the top rails (B) to length. Then, crosscut the stretchers (C) to the length listed in the Bill of Materials.

3 Mark the mortise location centerlines on the inside surface of each leg (A) where shown on the Leg and Top Side Rail drawing. To ensure alignment, use a square and mark all the centerlines at once as shown at *right*.

Continued

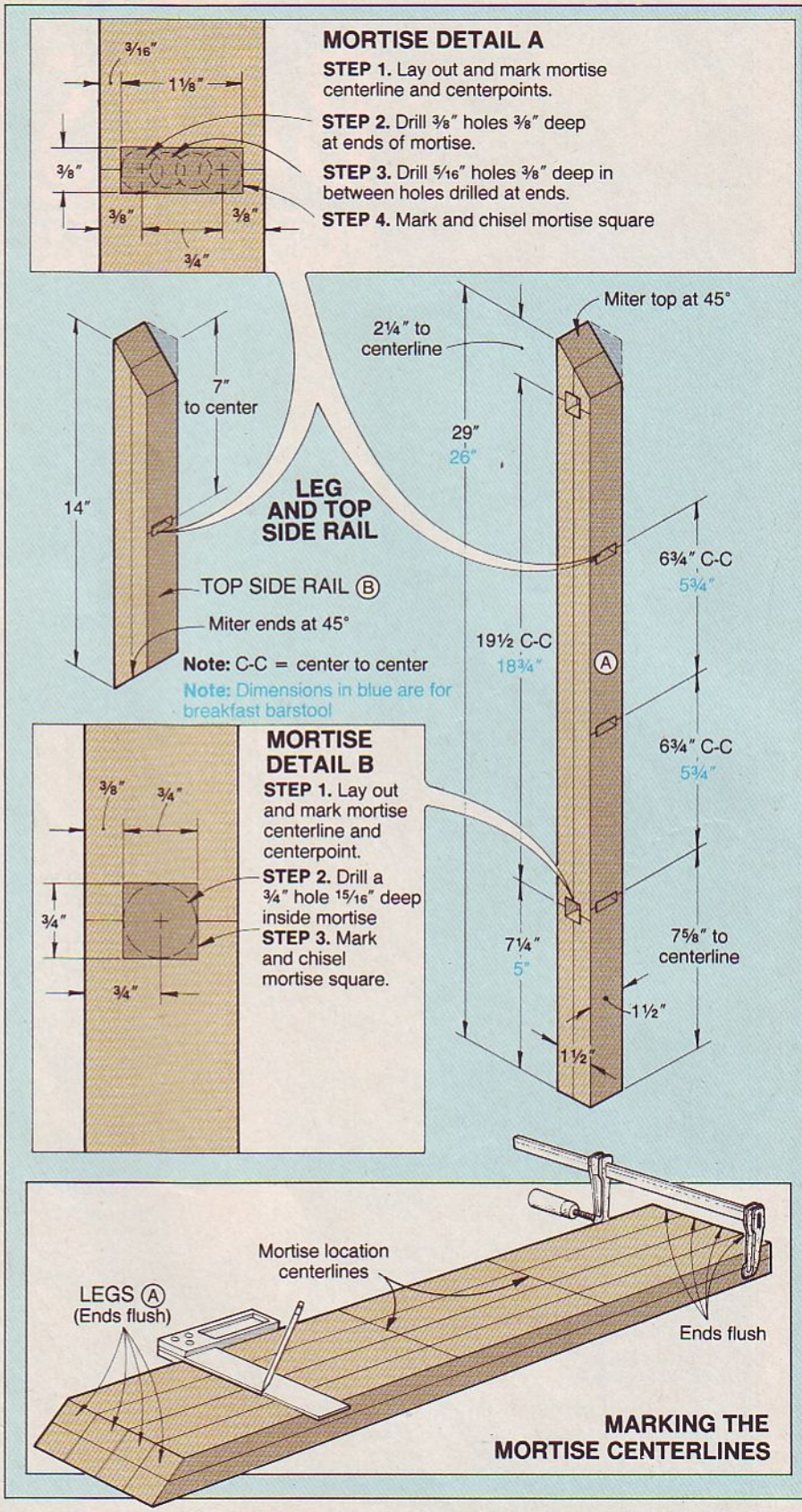

Cutting Diagram

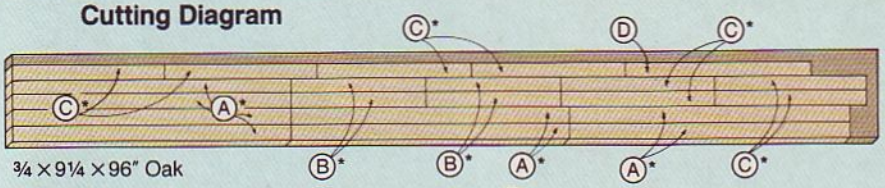

¾ × 9¼ × 96" Oak

*Laminate ¾" stock to form 1½"-square pieces

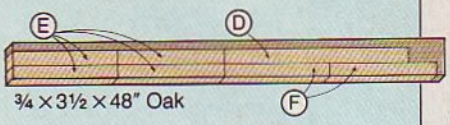

¾ × 3½ × 48" Oak

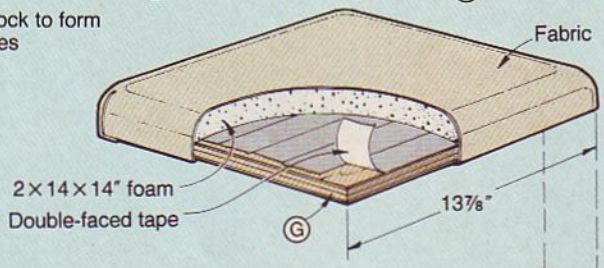

Bill of Materials

Part	Finished Size*			Matl.	Qty.
	T	W	L		
A* legs	1½"	1½"	29"	LO	4
B* top side rails	1½"	1½"	14"	LO	2
C* stretchers	1½"	1½"	15¾"	LO	4
D mullions	¾"	1½"	19 13/16"	O	2
E rails	¾"	1½"	11⅝"	O	4
F bottom side rails	¾"	1½"	11⅝"	O	2
G seat	¾"	13⅞"	13⅞"	P	1

*Initially cut parts marked with an * oversized. Then, trim each to finished size according to the how-to instructions.

Material Key: LO—laminated oak, O—oak, P—plywood

Supplies: #8 × 1½" flathead wood screws, 2 × 14 × 14" foam, double-faced tape, finish, upholstery fabric, glides.

EXPLODED VIEW

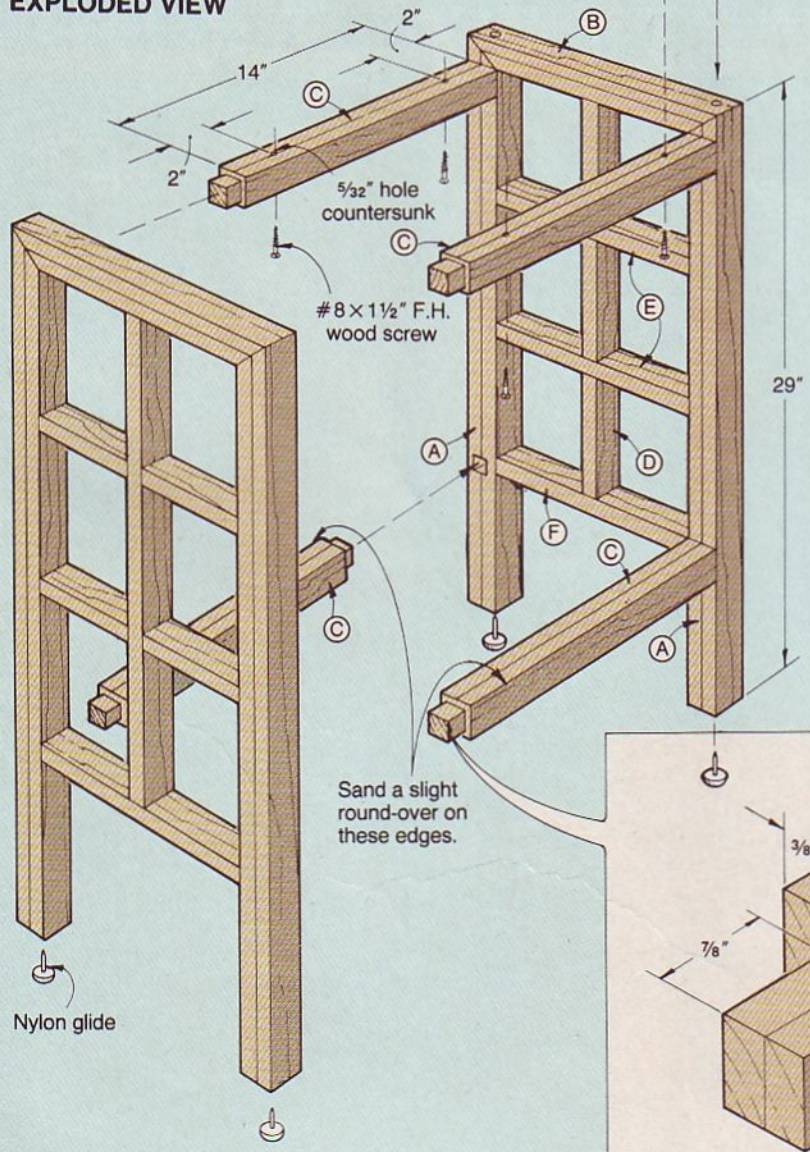

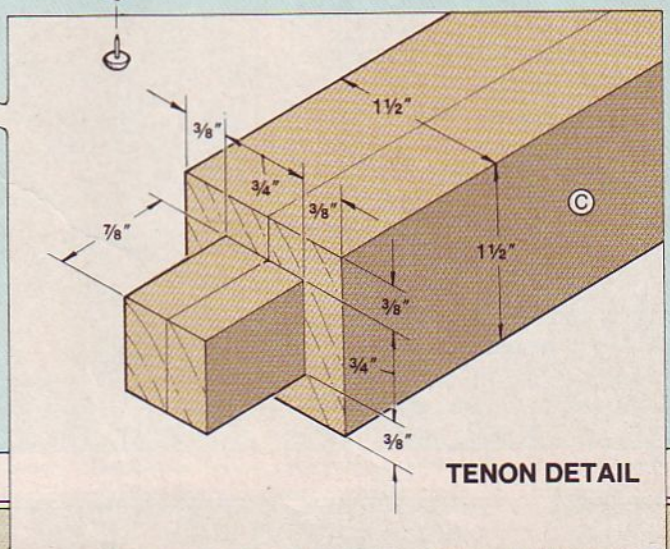

TENON DETAIL

4 Mark the mortise location centerlines on the adjoining inside surface of each leg to mate with the stretchers (C). Hold the legs together to check that the mortises are marked on the correct surfaces. Then, repeat the process to mark the location of the mortise centerline on each top side rail (B) to mate with mullions (D).

5 Referring to the Mortise details accompanying the Leg and Top Side Rail drawing, lay out and form the mortises in the legs and top side rails as described.

6 Cut the mullions (D) and rails (E, F) to the sizes listed in the Bill of Materials. Cut tenons on the ends of parts C, D, E, and F to the sizes shown on the drawings. Do not cut tenons on the bottom ends of the mullions.

7 As shown in the photo at *right*, use a square and pencil to transfer the notch locations to the mullions. (We found it more accurate to directly transfer the notch locations rather than try to lay them out by dimensions.)

8 Mark the notch locations on the rails (E). Cut the ¾" notches ¾" deep in each rail and mullion where marked. (We test-cut scrap first to ensure a tight fit.)

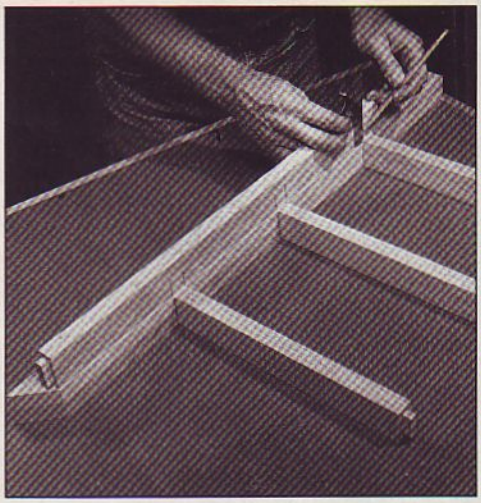

Transfer the notch locations to the mullion using a small combination square.

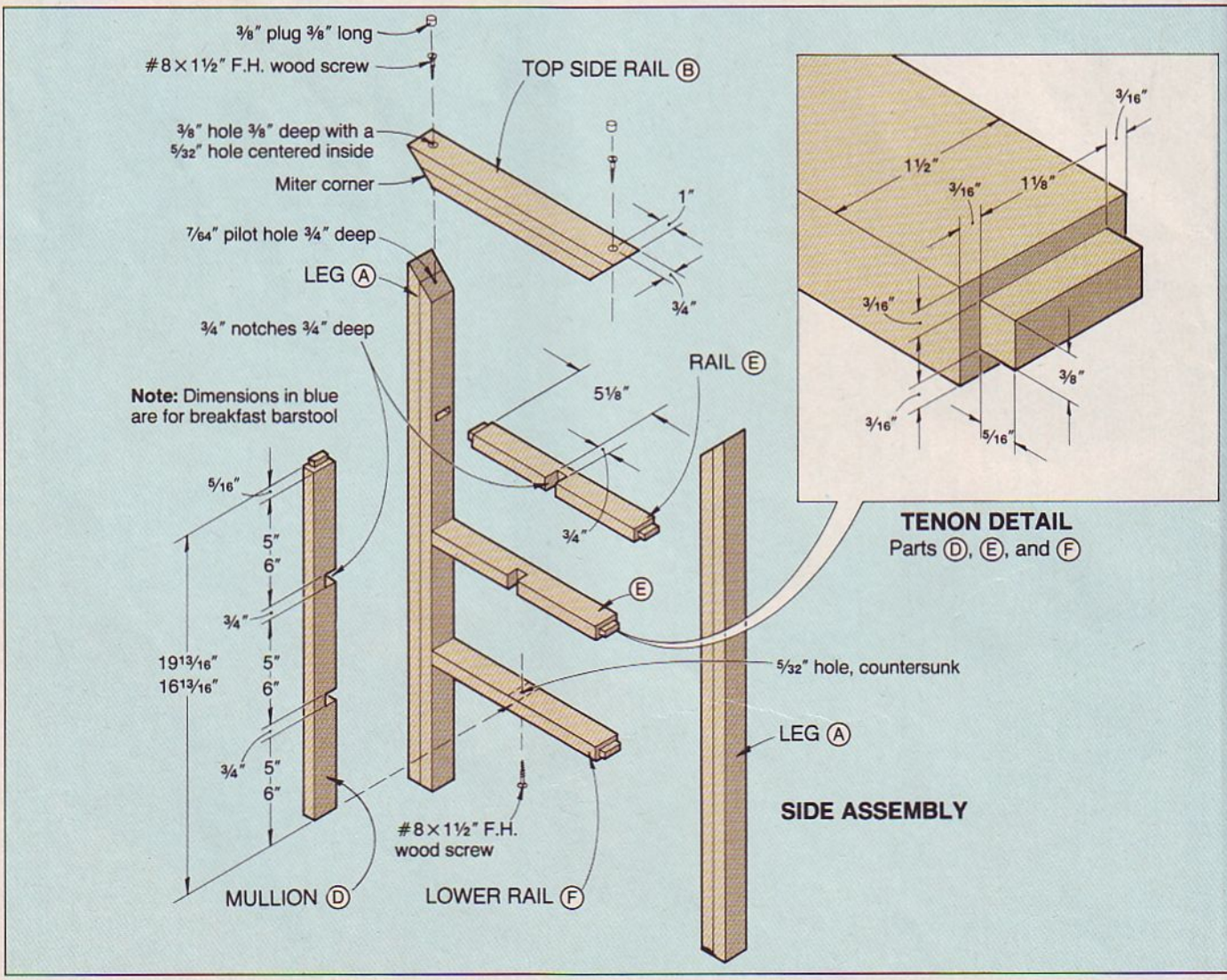

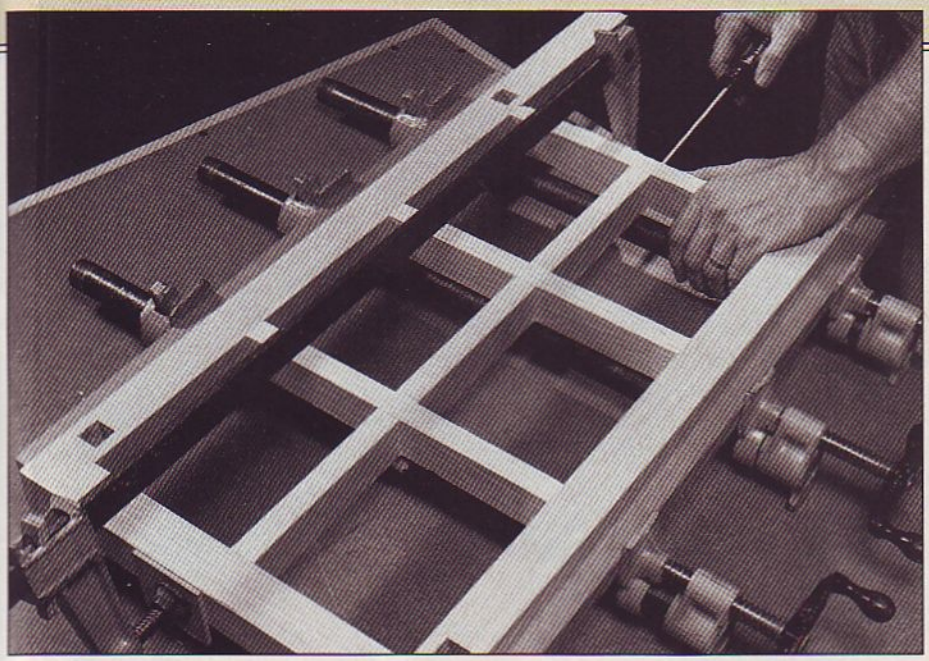

Drill the hole, and screw the bottom side rail to the bottom end of the mullion.

UPHOLSTERING THE SEAT

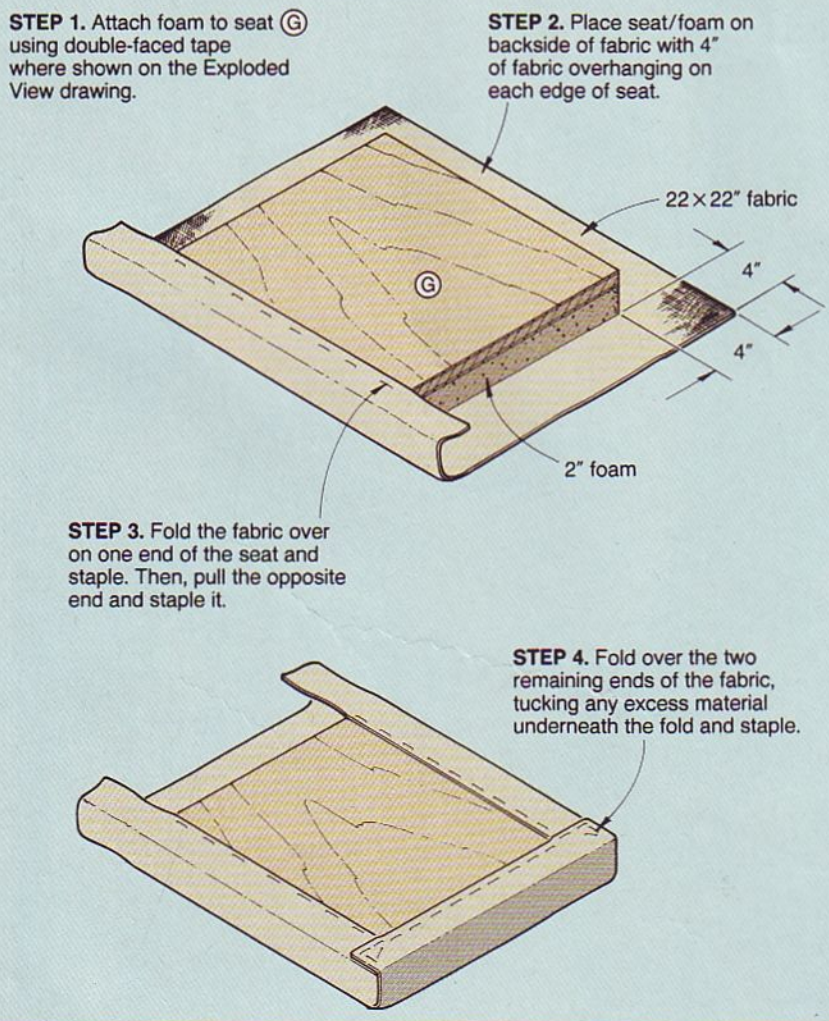
STEP 1. Attach foam to seat Ⓖ using double-faced tape where shown on the Exploded View drawing.
STEP 2. Place seat/foam on backside of fabric with 4" of fabric overhanging on each edge of seat.
22×22" fabric
4"
4"
Ⓖ
2" foam
STEP 3. Fold the fabric over on one end of the seat and staple. Then, pull the opposite end and staple it.
STEP 4. Fold over the two remaining ends of the fabric, tucking any excess material underneath the fold and staple.

Assemble the sides for a steady seat

1 Glue and clamp a mullion (D) and two rails (E) together, checking for square. Before this glue dries, glue and clamp the legs (A) and bottom rail (F) to the D/E assembly. Next, glue and clamp the top rail (B) to the assembly where shown in the photo at *left*.

2 To secure the mullion (D) to the bottom rail (F), drill the mounting hole to the sizes stated on the Side Assembly drawing. Fasten the rail to the bottom end of the mullion with a #8×1½" wood screw. Drive the screw as shown in the photo at *left*.

3 To strengthen the mitered joints at the top ends of the legs, drill the mounting holes, and secure with wood screws. Plug the holes and sand the plugs flush.

4 Remove the clamps, scrape off the excess glue, and sand each side assembly smooth.

5 Glue and clamp the four stretchers (C) between the side assemblies. Check for square.

6 Drill and countersink a pair of seat-mounting holes through each top stretcher (C) to the size shown on the Exploded View drawing.

7 Sand a slight round-over on the top outside edge of each bottom stretcher (C) where shown on the Exploded View drawing. Then, sand the stool smooth and apply the finish. For the painted version, brush on two coats of lacquer sanding sealer after sanding. Then, apply three coats of semi-gloss black enamel spray paint. Sand lightly between coats with 400-grit sandpaper.

Upholster the top

1 Cut the plywood seat base (G) to size from ¾" plywood.

2 Follow the four-step drawing *left* to upholster the seat.

3 Center the upholstered seat on the stool. Drill mounting holes, and screw the seat to the stool.

4 Attach the nylon glides to the bottom of the legs.

Produced by Marlen Kemmet Project Design: James R. Downing Photographs: Hopkins Associates Illustrations: Kim Downing; Bill Zaun

MAKING FACES

There's no need to get flustered when it's time to put a face on your carving. With the right proportions and some simple techniques, you can't go wrong. As a bonus, we'll show you great ways to make the eyes—often the most troublesome step in face carving.

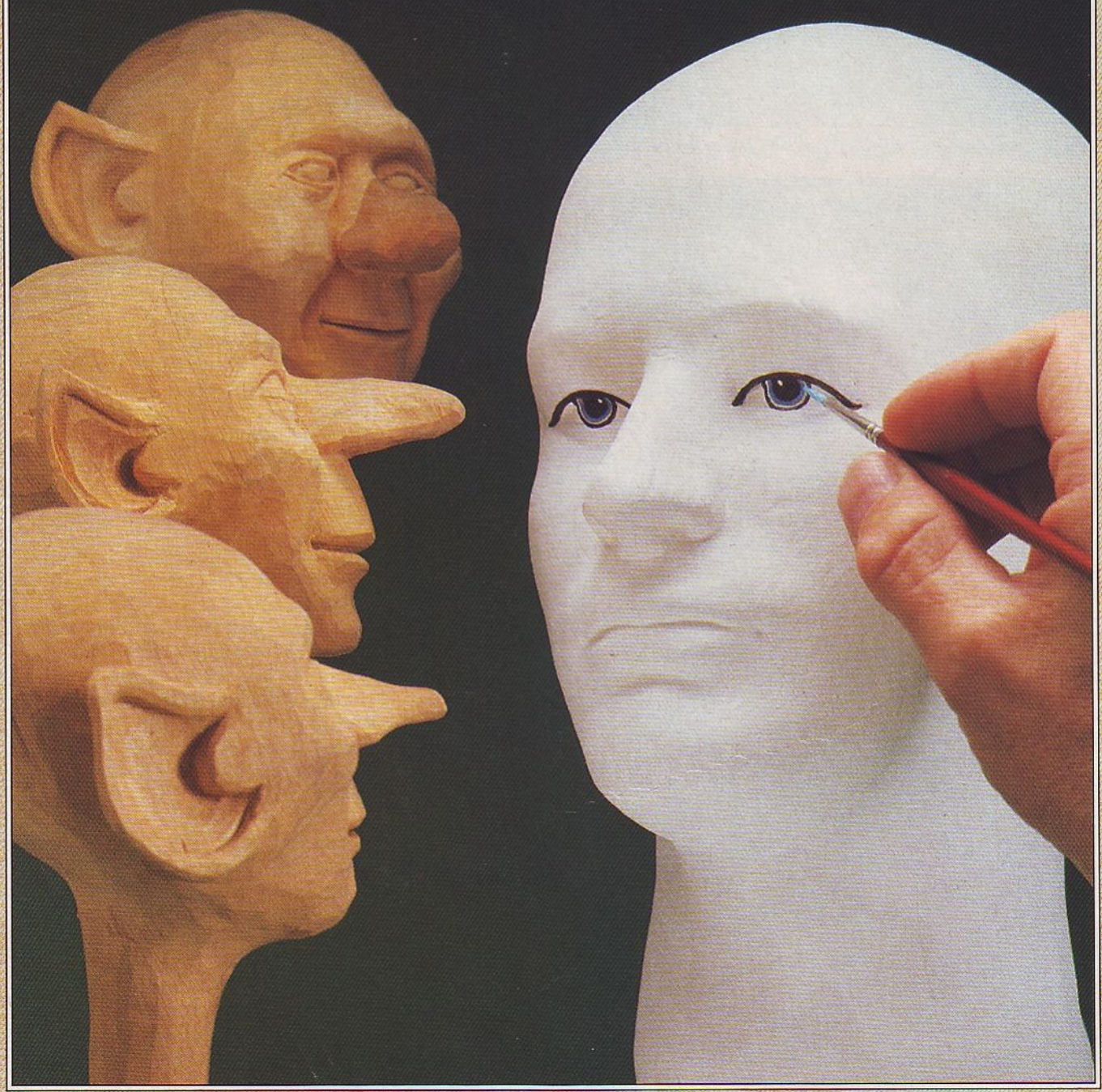

Tips on how to give your carvings character

PROPORTION IS EVERYTHING!

To carve a human face, you must know what one looks like. Sure, you've seen a lot of faces, but have you studied them? Let's study the nearest face—your own.

With your thumb on your chin, bring the index finger to the tip of your nose. Hold the measurement and move your hand so the thumb rests on your nose. Your index finger should fall close to your eyebrows. Still holding the measurement, place your thumb on an eyebrow and notice that your index finger hits near the top of your forehead. Not precisely, but pretty close. ***Discovery No. 1:*** *The nose and eyebrows divide the face into thirds.*

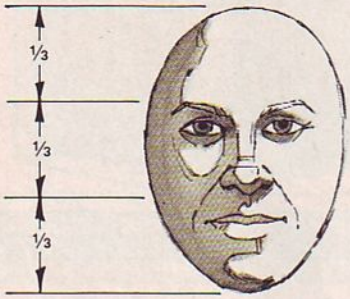

Now, put your thumb back on your chin and bring your index finger to your lips. Move your thumb to your lips and you should end up with your finger a little above the tip of your nose. ***Discovery No. 2:*** *The mouth sits a little higher than halfway between the chin and nose.*

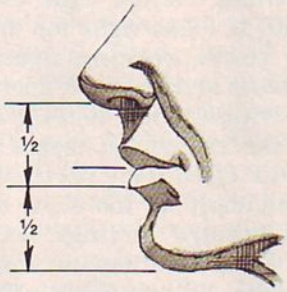

Next, measure the width of one eye with your thumb-and-finger calipers. Now, when you move your thumb to the inside corner of one eye, your index finger will fall neatly into the inside corner of the other one. ***Discovery No. 3:*** *The eyes are about one eye-width apart.*

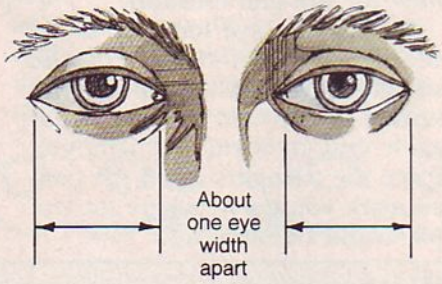

Okay, here's another one. Point your index finger straight up from one corner of your mouth. You'll notice that you can't see much that's directly in front of you with the eye on that side since the finger goes right across the middle of it. Try it on the other side. ***Discovery No. 4:*** *Vertical lines through the pupils mark the sides of the mouth.*

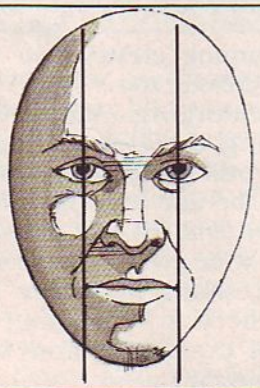

Press your hand to your forehead horizontally (as if intense study has given you a headache), and then to the lower part of your face, covering your mouth. When you lift your hand away each time, you'll see that it is bent. ***Discovery No. 5:*** *The face curves at the top and bottom, and along the sides. It isn't flat.*

The face doesn't just sit on front of the head, it wraps around it. "A bird's-eye view of a human head suggests an egg shape, or home plate on a baseball diamond," *WOOD®* magazine's carving consultant Harley Refsal explains. The greatest width spans the tops of the ears, and the longest distance is from the back of the head to the tip of the nose. "If the head on your carving is not shaped this

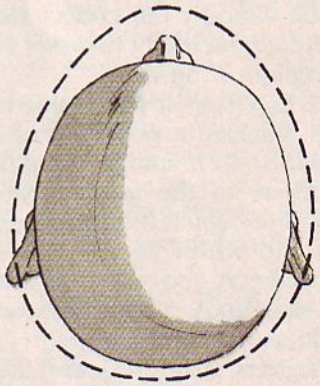

way, your completed face may look convincing when viewed from the front, but you will not be able to see facial features when viewing a profile," he notes.

To get the correct wraparound look, Harley starts carving a face on a corner of his workpiece. On a full-figure carving with a rectangular head, he carves the front of the head to a corner before beginning the face.

Continued

MAKING FACES

LET'S TRY IT

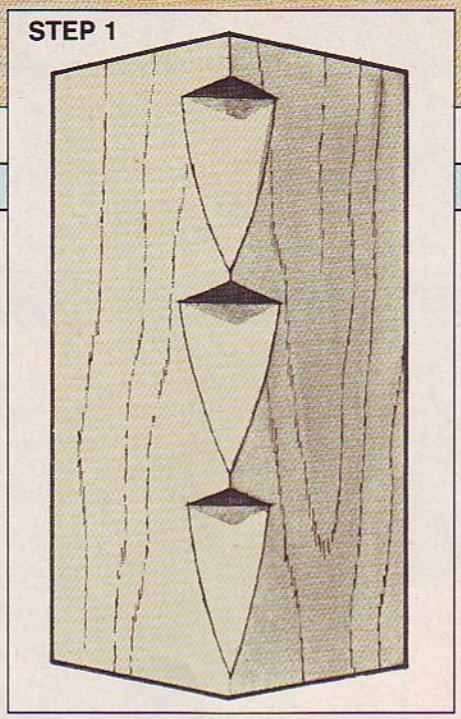

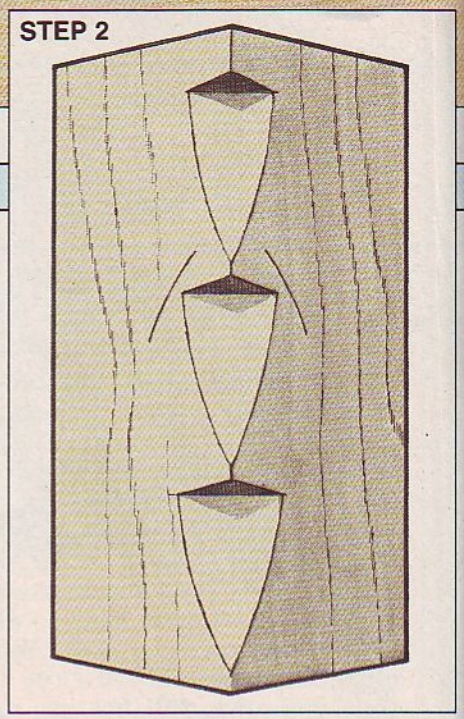

Grab a piece of carving wood (basswood does nicely) about 1×1×8", a sharp carving knife, and a pencil, and we'll craft a face in five easy steps. Turn a corner of your workpiece toward you, and then cut three sawtooth notches about ¾" apart along the edge, see step 1. The points will become the brow, nose, and chin.

Next, pencil in the smile lines, starting from the sides of the nose. Extend them downward and outward like the legs of the letter A, step 2. Carve the smile lines with V-cuts. Form the mouth with a

AND NOW, FOR THE EYES

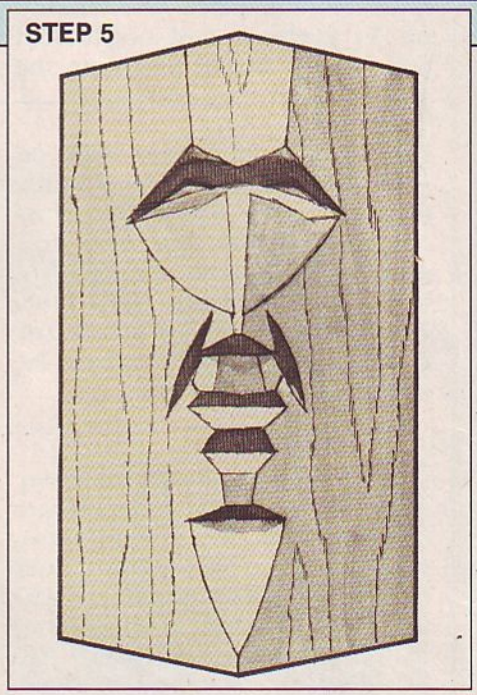

If eyes are the windows of the soul, then it's the eyes that bring a little bit of soul to any human-face sculpture. You may be able to get away with a lumpy nose or too-thin lips on your carving. But, beady little eyes set too close together will make what you wanted to be a kindly old codger look like some demented character out of a Stephen King novel.

Your first step toward pleasing eyes is to place a pencil mark in each eye socket, straight up from the corners of the mouth. Next, draw a line centered on the mark. It sets the width of the eye, so don't make it too short. Widths vary—sometimes an eye is nearly as wide as the mouth.

For starters, make your eye lines about one-half to two-thirds the mouth's width. Adjust your eye width until it looks right for the character you're creating. Space the eyes about an eye-width apart.

A low, wide triangle located at the V of the eye socket makes a simple and effective eye treatment, particularly for flat-plane or other less detailed carvings. Let's add this stylized variety to your practice face, concentrating for now on size and location.

Lay out the eye location as described earlier. Now, cut the straight line with the tip of your knife. Then, cut upward from each end to form the triangle. Place the triangle's tip at the pencil mark you drew, where the pupil would be, step 5.

ADD SOME CHARACTER

Extra details, such as wrinkles, crow's-feet, or bags under the eyes, add realism and make your carving more interesting. Pencil in these details first, trying different effects, and then carve them with your knife tip or a small V-tool. Chip-carving knives work great for fine wrinkles.

Form eyebrows with a series of fine, random V-cuts. Woodburn eyebrows for greater detail. Woodburning creates fine wrinkles or creases, too.

Try changing character by changing the line across the carved, oval eye described above. Raising the line to reveal more of the pupil and iris will, of course, give a wide-eyed look—possibly surprise, shock, innocence. Lowering the line will result in a range of expressions from sleepy to downright sinister.

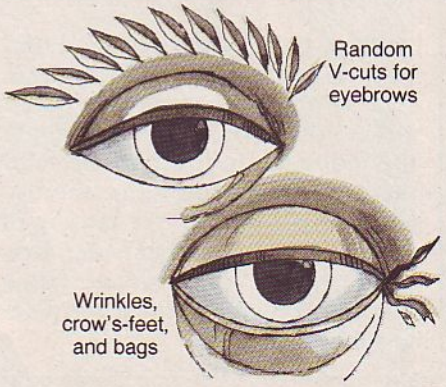

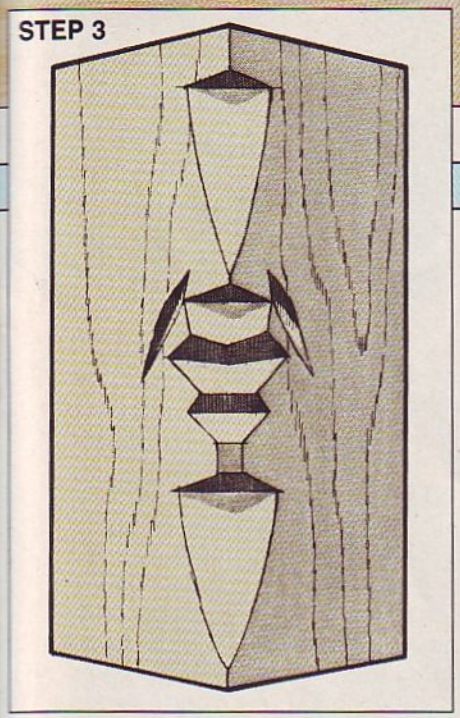

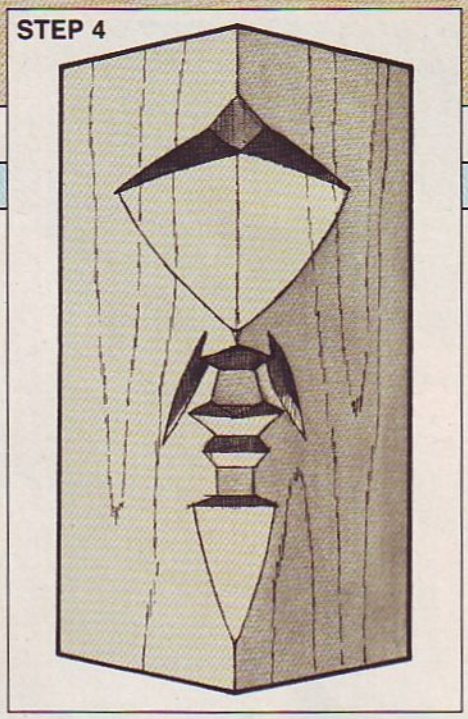

horizontal V-cut just above the midpoint between the nose and chin. Cut between the smile lines, but don't connect with them. Create the lower lip with a slightly wider V-cut just below and parallel to the mouth, step 3.

Add eye sockets to complete the basic face shape. Form them with wide, shallow, horizontal V-cuts, one on each side of the nose, step 4. Place the bottom of the cut near the tip of the nose and the top near the eyebrows. As well as establishing eye locations, these cuts give the nose a basic shape.

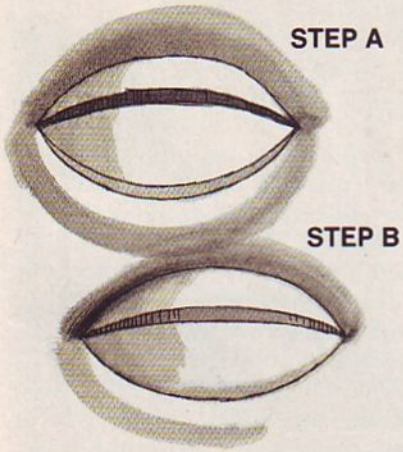

To carve a more detailed eye, start with placement as previously described. Then, instead of making a triangle, draw an elongated oval (picture a long, narrow football) with a slightly curved horizontal line across the middle. Set the eye width with the horizontal line; draw the oval about half as high as it is wide, Step A, *left*. Stop-cut the outline and carve a relief in the eye socket around the oval. Next, cut the horizontal line and carve the bottom half slightly lower to form an eyeball under the eyelid. Round-over the edges to blend the eye into the face, as shown in Step B.

Now, you can carve a partial circle on the lower part of the oval eye to represent the pupil and iris, or you can paint them for greater detail. If you intend to paint your carving, follow the steps shown *below* to put some twinkle into the eyes. If painting an oval eye, paint the top line along the eyelid, and the color highlights onto the carved oval. Watercolors or thinned acrylics work great, adding color without covering up carved details.

PRACTICE MAKES PERFECT

You can carve any style face with these basic proportions and techniques. For a more realistic carving, soften the exaggerated lines and angular planes. For caricatures, accentuate the features.

You can master faces if you keep studying and carving them. Make faces into a mirror (be sure you've shut the bathroom door before you start this) to see what happens to your mouth, nose, eyes, and brow. Study newspaper and magazine photographs of people, resin study casts (available from woodcarving suppliers), and other carvings. Carve a child's face (smooth, soft curves) and an old cowboy (wrinkled, angular). Carve a woman's face. You'll end up with a lot of totem poles, but you'll also be able to put a better face forward with your carvings.

You'll need these tools and supplies

- 1×1×8" carving stock (basswood or sugar pine)
- Carving knife
- Pencil

Written by Larry Johnston with Harley Refsal
Photograph: John Hetherington
Illustrations: Norma Refsal; Jim Stevenson

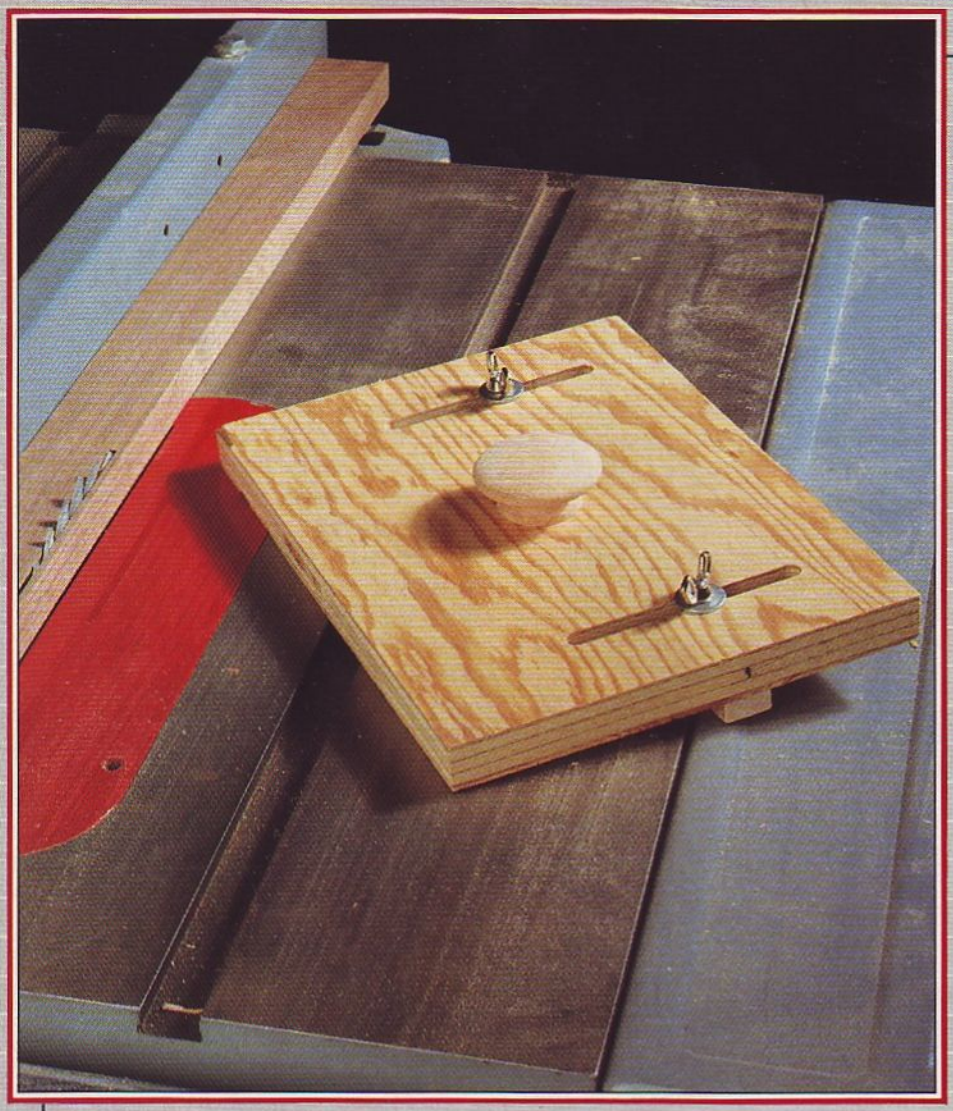

THE SAFE WAY TO RIP THIN STRIPS

Ripping thin strips between the tablesaw blade and fence can be risky business. But, if you need these strips for edging plywood shelves, adding inlay strips, or for use with our napkin holder on page76, we've come across a jig that makes the process super simple. It allows you to cut strip after strip, achieving uniform thickness without the worry of kickback.

Cut the parts and assemble the jig

1 From ¾" plywood, cut the base (A) to 7" wide by 10" long.

2 Referring to the Top View drawing of the base for location, mark the four centerpoints for the 5/16" holes. Drill the holes where marked. Now, use a straightedge to mark lines from hole to hole to lay out the pair of 5/16"-wide slots 3½" long on the plywood base.

3 Using a scrollsaw or jigsaw, cut along the marked lines to form the 5/16"-wide slots. Sand or file the cut edges of each slot.

4 Mark diagonals on the base to locate the center, and drill a hole for the handle to the size stated on the Exploded View drawing. Sand the base smooth, sanding a slight chamfer along one edge to allow for sawdust buildup.

5 Fasten a 2"-diameter knob (we used a cabinet knob) to the base, making sure the head of the mounting screw doesn't protrude below the bottom surface.

6 Cut the miter-gauge slot guide (B) to the width and depth of your miter-gauge slot, and crosscut it to 10" long. The guide should fit snugly in the slot; a loose fit can result in uneven thin strips later. Our guide measured 3/8" thick by ¾" wide. For the guide to slide easily in the slot, you may need to lightly sand one edge. Mark the centerpoints for the two ¼" holes. Drill and countersink the holes.

7 Check that the screw heads don't protrude. Then, epoxy a ¼ × 1½" flathead machine screw in each countersunk hole. Wipe off excess epoxy.

8 Fasten the guide to the base with ¼" washers and wing nuts.

Project Design: Loyal Downing
Photograph: John Hetherington
Illustrations: Kim Downing; Bill Zaun

AND SIMPLE
STRIP RIPPER

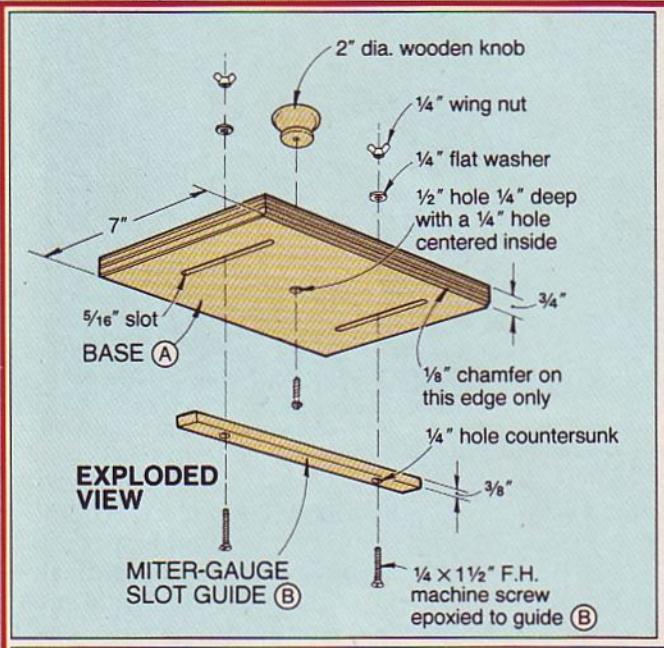

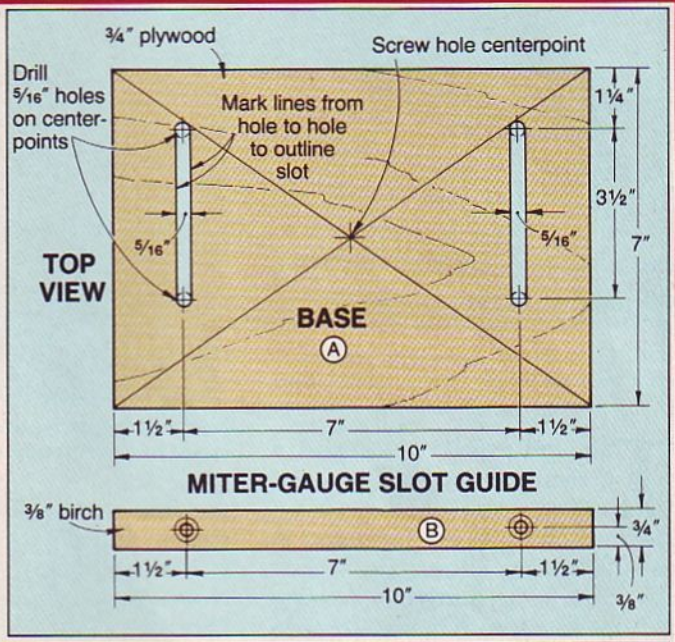

How to use the jig to rip some thin strips

Loosen the wing nuts, and position the inside chamfered edge of the base *parallel* to the saw blade, leaving a gap between the blade and the base equal to the width of the strips desired. Tighten the wing nuts. See Step 1 of the drawing *below* for reference. Place the stock to be ripped next to the jig. Then, move the rip fence against the stock where shown in Step 2 of the drawing *below*.

Remove the jig, start the saw, and cut a thin strip as shown in Step 3 of the drawing. Use a push-stick to keep your fingers safely away from the blade. Position the jig in the miter-gauge slot. Repeat steps 2 and 3 of the drawing to cut the next thin strip. Keep repeating the process until you feel uncomfortable with the distance between the blade and the fence (we stop at about ¾").

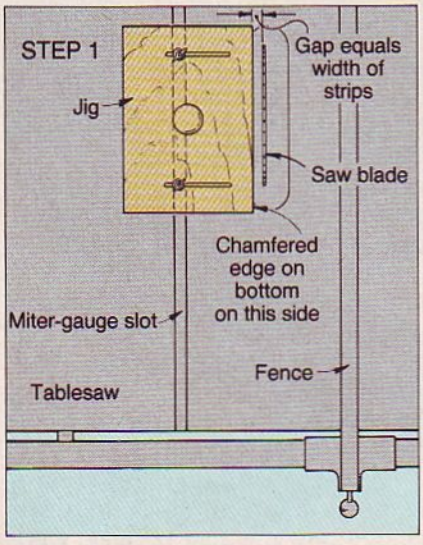

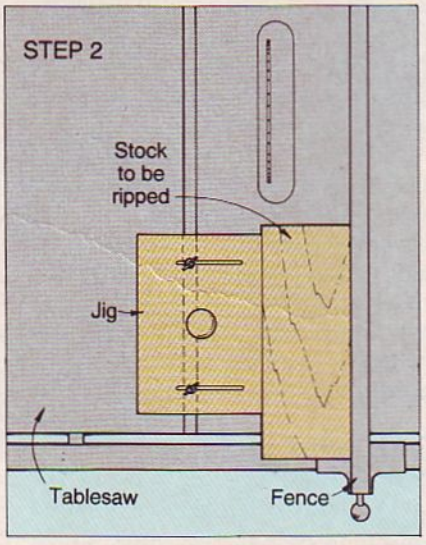

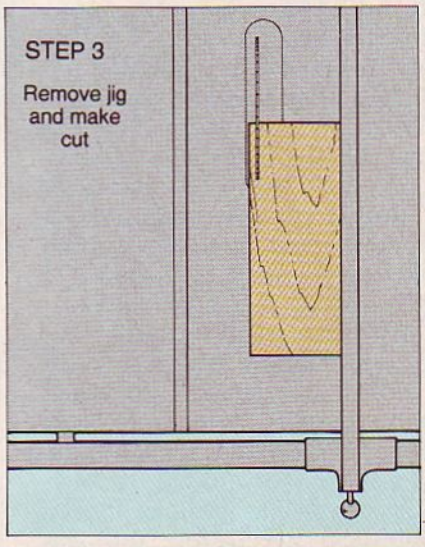

MARLOW'S MARVELOUS W

Design, detail, and nearly 60 years of constant production have spelled success for this Kansas scrollsaw business.

Marlow's largest woodcut—and most expensive at $495—measures 40×20". The farm scene includes a tiny squirrel in the tree and an oil can high on the windmill.

The year was 1932, and a young but disenchanted Margaret Lowe gave up music teaching to try her hand at manufacturing silhouette woodcuts, a popular European fretsaw art form she admired. The Depression, though, posed dim prospects for the new small business.

Undaunted, she drew up a half-dozen designs, bought a used, pedal-powered Barnes fretsaw and launched Marlow Woodcuts from her father's cabinet and furniture-making shop in small-town Americus, Kansas. Because the woodcuts were an immediate hit and the business grew phenomenally, her father soon gave up his trade to become her assistant.

Before long, Margaret had larger quarters and 50 employees. But when she saw that the new workers couldn't meet her standards for fine detail and high quality, she closed the new factory and scaled the business back down to family-size, as it remains today.

"After 53 years in business, Margaret sold Marlow Woodcuts to us in 1985," says present co-owner Wanda Douglas. "Her eyes were failing." Wanda and her husband-and-partner Gene had been Margaret's friends as well as trusted employees. "We believe this was the first woodcut business in the nation, and we didn't want to see it become history," adds Gene. Now, the Douglases' daughter, Pam Jones, and son Brad work for them full time.

Woodcuts for the world

Since its founding, the business has sold approximately a half-million woodcuts in 2,000 patterns. Customers from all 50 states and 32 foreign countries have visited the shop. Moreover, these exquisite wooden works of art have gone to such notables as Mikhail S. Gorbachev, the Rockefellers of New York, and U.S. congressmen. Marlow woodcuts have appeared in movies and television.

Of the 10,000-plus woodcuts sold each year, about half go to customers who drop by. They sell almost all the rest wholesale or by mail order. Wanda and Gene also attend some craft fairs. As for Marlow Woodcuts' promotional campaign? "It's all by word of mouth," Wanda explains.

Tools tried and true

Most Marlow woodcuts are of ⅛"- or 1/16"-thick locally-produced walnut plywood, but some come in solid wood. On projects requiring a variety of colors, species such as birch, vermilion (cardinal wood), purpleheart, tamo, and zebrawood lend visual zest.

The key machines in Marlow's main workroom have become two rigid-arm scrollsaws—a 24"-throat Delta-Rockwell and a 22"-throat Sears fitted with a Delta spring-tension head. Both are mounted on 30"-tall cobbler's benches so cutters can sit while they work. And, the owners have some strong views on what works and what doesn't on scrollsaws.

Most models today depend on parallel arms or C-arms that raise and lower the blade so that it travels forward and backward slightly. According to the Douglases, that allows the blade to wobble along its vertical path, making precise cuts impossible.

"For our kind of work, the rigid-arm saw with a spring-recoil head is the only acceptable machine," Wanda comments. "Besides," adds son Brad, "when a blade breaks on the spring-recoil head, it stops instantly."

For better visibility and control of the workpiece, the hold-down clamps and the dust blowers were

US WOODCUTS

Left. **Only German-made, 2/0 scrollsaw blades will do at Marlow Woodcuts. "Their smooth cut eliminates edge sanding," says Wanda.** *Above.* **A wall in the Marlow shop store displays a few dozen of their 2,000 patterns.** *Below left.* **Presidential and state seals are popular items.**

removed long ago. And to speed up and simplify blade changing, Margaret Lowe designed a clamp with a conical opening that centers the blade as it's inserted. A twist with an allen wrench tightens the clamp securely, meaning an operator can remove a blade threaded through a start hole and reinstall it in seconds. Wanda says the life of a 2/0 blade—about 1/64" wide—ranges from five seconds to two hours, depending on the operator, the design, and the wood.

Techniques for terrific cuts

The Douglases offer these tips for skillful scrollwork:

- Drill start holes near a corner or next to a straight line—never on the pattern line.
- If you botch cutting out a particular detail—such as a tiny squirrel on a tree limb—redraw that part of the pattern onto a different, but acceptable area and cut it again.
- When scrollsawing tiny letters, be sure to cut them all out at one sitting, or they may not look alike.
- Determine when you do your best scrollsawing and plan your work accordingly. For example, Brad starts the day with easy cuts and works up to the complex. Wanda does the reverse.
- To cut tiny pieces more easily, make a wood or plywood replacement for the metal insert in the tabletop. Drill into this a hole much smaller than the original.

Written and photographed by George Brandsberg

RUGGED ROAD

Whether pushing a path across the backyard sandbox or raising the nap of the toy-room carpet, this Fat Cat road grader turns your youngster into a small-time, heavy-equipment operator. The front end pivots for tackling rough terrain, and a hand-turned wheel lets a child angle the blade for pushing dirt or sand to one side.

FAT-CAT TOY PLANS

To date, we've presented plans for these Fat-Cat toys: (1) semi-trucks and trailers, (2) excavator, (3) bulldozer, (4) dump truck and lowboy, and (5) front-end loader. If you're interested in constructing any of these toys, send $2 per plan (five available) and a #10 business envelope (one stamped envelope per plan) with 55¢ postage per plan to *WOOD®* magazine, P.O. Box 11454, Des Moines, IA 50336-1454.

Note: You'll need some thin stock for this project. You can either plane or resaw thicker stock to the sizes in the Bill of Materials.

First, the laminated cab

1 Cut a piece of ¾" pine to 2" wide by 12" long for the cab (A).

2 Measuring 1" from each end of the 12"-long pine stock, mark the location for a 1⅜" dado. Cut the marked dadoes ½" deep where shown at *right*.

3 Crosscut the pine into two equal lengths. Mark the windshield location on one piece, aligning the top of the windshield with the top of the dado. (See the Windshield detail accompanying the Exploded View drawing for reference.) Drill four ¼" holes in the corners inside the marked windshield. Using a scrollsaw or coping saw, cut the opening to shape. Sand or file the edges of the windshield.

4 Apply glue to the mating surfaces, align the dadoes, and clamp the cab parts. Remove excess glue before it dries.

5 Trim the top and bottom of the cab lamination to length

GRADER ANOTHER WINNER IN OUR FAT CAT™ TOY SERIES

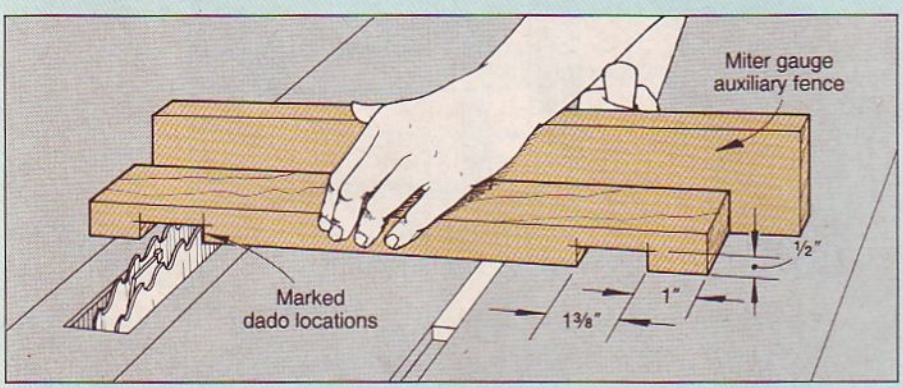

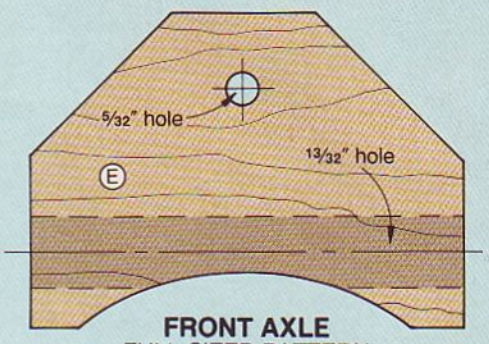

FRONT AXLE
FULL-SIZED PATTERN

where dimensioned on the Exploded View drawing. Sand ⅛" round-overs along the cab top where shown on the drawing.

Cut the body parts to size

1 Cut the hood (B), chassis (C), rear-axle supports (D), and front-axle support (E) to the sizes listed in the Bill of Materials. Then, transfer the full-sized front-axle pattern to the pine block (E) and cut the bottom curve to shape.

2 Sand ⅛" round-overs on the hood and cab where shown on the Exploded View drawing.

3 Mark all the hole centerpoints on the hood, chassis, and axle supports. One at a time, support each piece with a handscrew clamp, and drill the holes (we used a drill press) to the sizes listed on the Exploded View drawing. (To prevent the bits from wandering off the marked centerpoints, we used brad-point bits.)

4 With the top and rear edges flush, glue and clamp the chassis between the rear-axle supports. Later, scrape off the excess glue, sand the top surface flat, and glue and clamp the cab and hood to the chassis assembly (C, D) where shown on the Exploded View drawing.

5 Cut a 1½" length of ½" dowel for a smokestack, and glue it into the hole in the hood where shown. Then, glue the radiator cap (½" wood button) into the remaining hole.

6 With the top edges flush, center and fasten the front-axle support to the front of the chassis with a screw and washer where shown on the drawing.

Now, add the grader blade

1 Cut the blade (F) and blade wheel (G) to size. Then, cut a piece of ⅜" dowel to 2" long.

2 Drill a ⅜" hole ⅝" deep centered in the top of the blade where shown on the Final Assembly drawing. Next, drill a ⅜" hole ⅜" deep centered on the bottom side of the blade wheel.

3 Glue the blade parts together with the dowel through the hole in the chassis.

Next up, the wheels

1 To make six wheels (H), cut a piece of ¾"-thick pine to 4 × 20". Starting 3" from one end, mark six centerpoints 3" apart.

2 With a compass, mark a 2"-diameter circle (1" radius) at each marked centerpoint.

3 Chuck a 1" Forstner bit into your drill press. As shown in the photo *below*, center the bit over each marked centerpoint, and bore a ½"-deep hole. (We used the stop on our drill press to ensure uniform depth.)

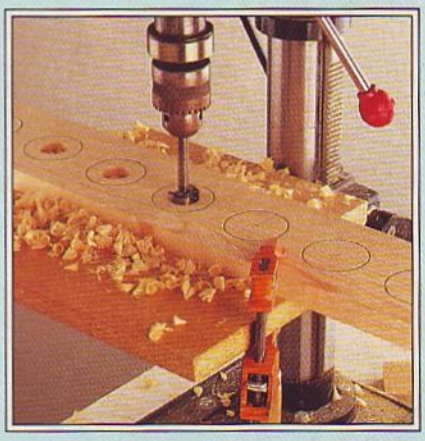

Mark the centerpoints, and use a Forstner bit to drill 1" holes ½" deep centered in each marked wheel.

4 Chuck a circle cutter into your drill press. Turn the cutter blade so the pointed end is on the inside and will cut a perfect wheel.

Continued

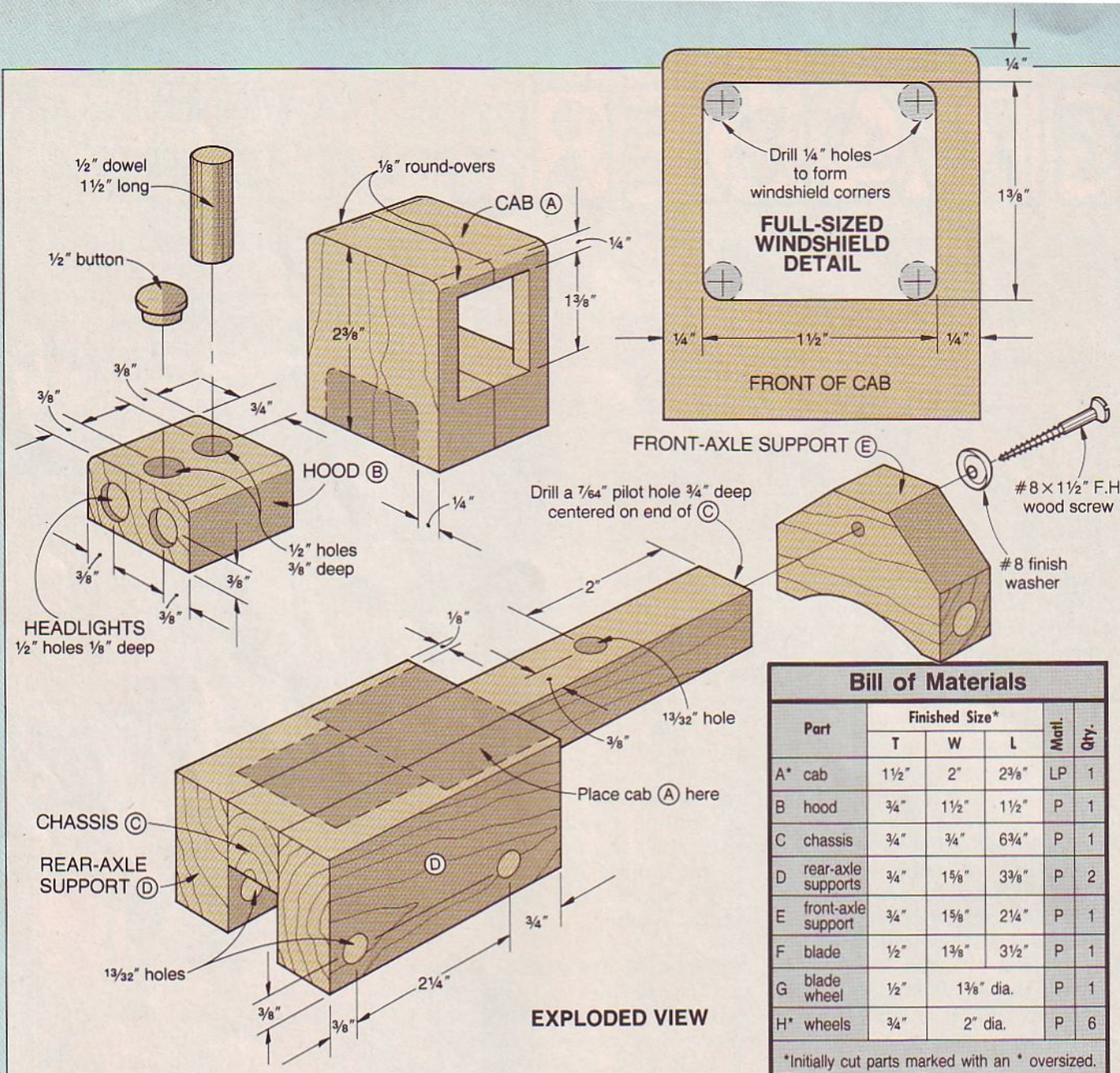

Bill of Materials

Part		Finished Size* T	W	L	Matl.	Qty.
A*	cab	1½"	2"	2⅜"	LP	1
B	hood	¾"	1½"	1½"	P	1
C	chassis	¾"	¾"	6¾"	P	1
D	rear-axle supports	¾"	1⅝"	3⅜"	P	2
E	front-axle support	¾"	1⅝"	2¼"	P	1
F	blade	½"	1⅜"	3½"	P	1
G	blade wheel	½"	1⅜" dia.		P	1
H*	wheels	¾"	2" dia.		P	6

*Initially cut parts marked with an * oversized. Then, trim each to finished size according to the how-to instructions.

Material Key: LP—laminated pine, P—pine

Supplies: ⅜" dowel stock, ½" dowel stock, ½" wood buttons, #8 × 1½" flathead wood screw and a #8 finish washer, ⅜" flat washers, ⅜" all-thread rod 5" long with nuts and washers for sanding arbor, clear finish.

Raise the blade ⅝" higher than the bottom of the pilot bit. Center the pilot bit over the depression left by the Forstner bit in each hole, and cut the wheels to shape as shown in the photo at *right*.

5 Remove the circle cutter, and chuck a ⅜" twist drill bit into your drill press. Secure a wheel in a handscrew clamp, and enlarge the ¼" pilot hole to ⅜". Repeat for each wheel.

6 Cut a piece of ⅜" all-thread rod to 5" long, and chuck it into your drill press. Using nuts and washers, attach a wheel to the work arbor where shown in the drawing at *right*. With the drill press running at about 750 rpm, hand-sand a ⅛" round-over on the wheel where shown on the drawing. (We found sanding the round-overs safer and easier than trying to rout them on a router table.)

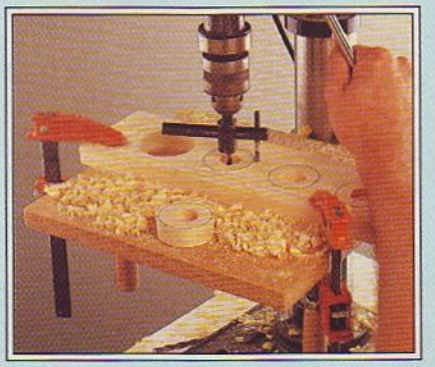

Center the circle-cutter pilot bit over the Forstner-bit depression, and cut the wheels to shape.

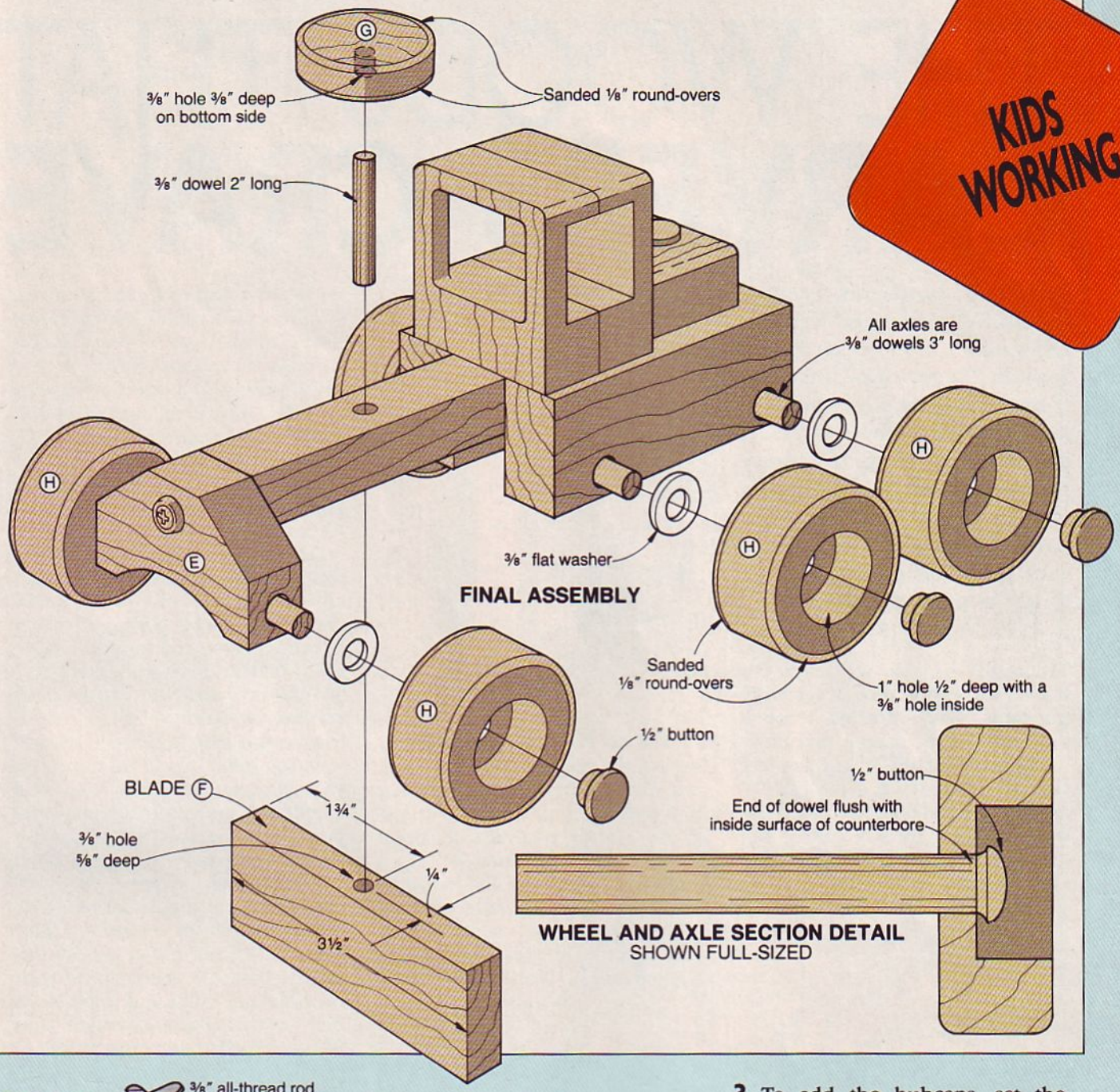

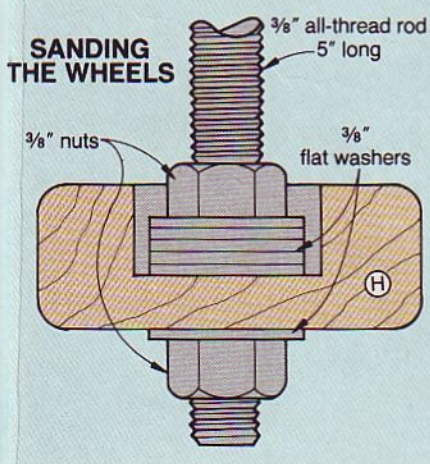

Mount the wheels, and grade some roads

1 Cut three 3/8" axles to 3" long.

2 Glue one wheel onto each axle so that the end of the dowel is flush with the inside of the counterbore. Later, place 3/8" washers on the axles next to the glued wheels, and slide the axles through the front- and rear- axle supports. Add another washer onto each axle, and glue on the remaining wheels, leaving enough free play so the wheels turn easily.

3 To add the hubcaps, set the grader on its side. Place a drop of glue on the ends of the axles, and glue a 1/2" wood button to the end of the dowel (see the detail *above* for reference). After the glue dries, flip over the assembly and repeat for the other hubcaps.

4 Apply a clear finish to all the parts (we used polyurethane).

END

Produced by Marlen Kemmet
Project Design: James R. Downing
Photographs: Hopkins Associates
Illustrations: Kim Downing; Mike Henry

THE WOODS THAT CARVERS CRAVE

Basswood, butternut, catalpa, tupelo—experienced carvers recognize these woods as old friends. They know their attributes, quirks, and temperaments. Beginners who select the wrong wood for their projects, though, may never want to carve again. Here are some tips on choosing a carving wood and a guide to the popular species.

The well-honed woodcarver knows the importance of selecting the right wood. After all, a lot of time will be spent with that piece of wood before the carving emerges. And what a disappointment if it doesn't turn out quite right! That's why any carver will tell you that it pays to know your silent partner.

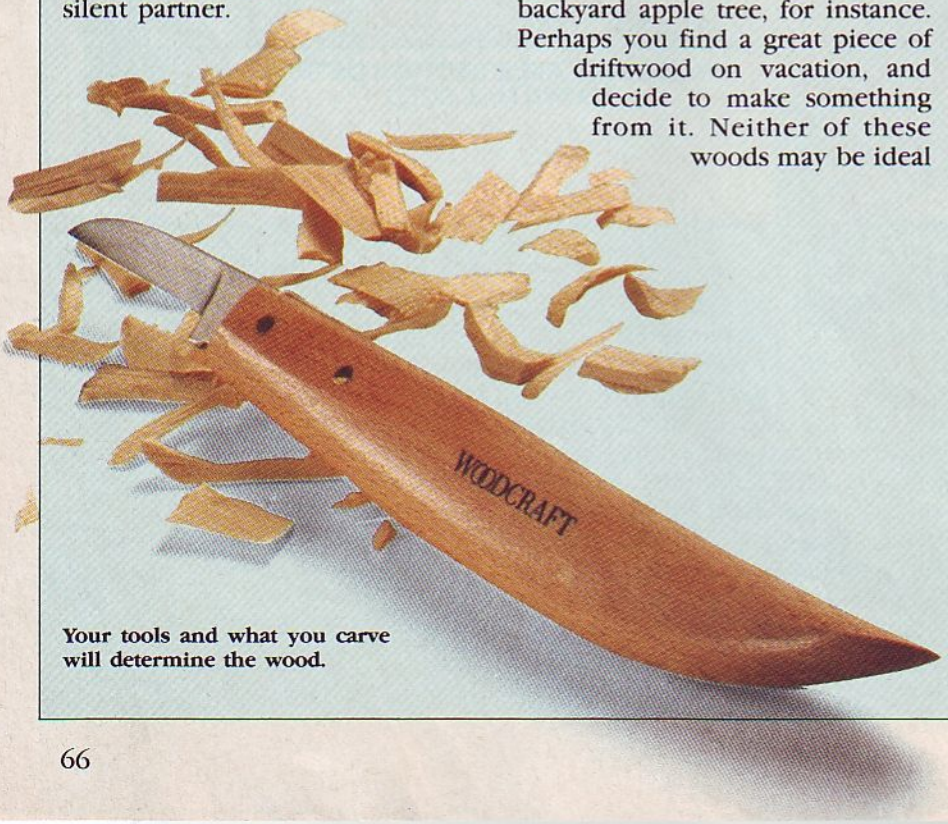

Your tools and what you carve will determine the wood.

What to look for in wood

Sometimes, just for the heck of it, you want to carve a specific piece of wood for a project, regardless of the stock's qualities: a spoon carved from the pruned limb of a backyard apple tree, for instance. Perhaps you find a great piece of driftwood on vacation, and decide to make something from it. Neither of these woods may be ideal for carving, but in these instances, it's the source that's special. Most times, though, you'll want to remember these guidelines:

- *Always select well-seasoned wood.* Green, moisture-laden wood likely will crack and check as it dries, leaving unwanted flaws in your work. So, carve either kiln- or air-dried stock, but mostly, leave green wood alone.
- *Carve only straight-grained and knot-free stock.* Unless you're an advanced carver striving for a special effect, avoid burls and other figure with twisted, unpredictable grain that leads edges astray.
- *Choose wood that suits your carving method.* A small, handheld, whittling project typically requires softer wood than a piece that you secure in a vise and carve with gouges and a mallet. If power-carving suits your interest, realize that your equipment, fitted with the right cutters, probably can tackle the toughest woods.
- *Keep the finish in mind.* Light-colored, featureless wood demands paint or stain. Stock with breathtaking color and grain looks best with a natural finish that won't compete with the wood.
- *What you carve counts, too.* A cowboy caricature probably would look odd in oil-finished walnut, as would a modern, flowing sculpture decked out in multicolored paint.

Now that you know some of the reasoning that underlies the selection of wood for a carving, look at the chart, *right,* and see what each species has to offer you. Remember, all of them have a following among carvers.

Written by Peter J. Stephano
Illustration: Jim Stevenson

12 TOP CARVING WOODS

TYPE OF WOOD	GRAIN	HARDNESS	COMMENTS	USES	FINISH	AVAILABILITY	COST
BASSWOOD *(Tilia americana)*	Tight Straight Uniform	Soft	Takes detail	Figures Relief Signs Wildlife	Paint Stain	Common	Inexpensive
BUTTERNUT *(Juglans cinerea)*	Straight Semi-open	Medium	Takes detail Getting harder to find	Figures Relief Sculpture Signs Furniture	Natural Stain	Regional	Moderate
CATALPA, NORTHERN *(Catalpa speciosa)*	Tight Twisted Figured	Medium	Noncommercial; obtain from local sources	Figures Sculpture	Natural Stain	Regional	Inexpensive
CHERRY *(Prunus serotina)*	Tight Straight Uniform	Extreme hardness	Avoid sap pockets Takes fine detail	Relief Sculpture Furniture Architectural trim	Natural	Common	Moderate
COTTONWOOD *(Populus sp.)*	Tight Straight Uniform	Soft	Fuzzes	Figures	Paint Stain	Regional	Inexpensive
HONDURAS MAHOGANY *(Swietenia mac.)*	Tight Straight Uniform	Hard	Takes fine detail	Relief Sculpture Furniture Architectural trim	Natural	Common	Expensive
JELUTONG *(Dyera costulata)*	Tight Straight Uniform	Soft	Sap pockets Takes fine detail	Figures Wildlife	Paint Stain	Common	Expensive
OAK, RED *(Quercus rubra)*	Open Straight Uniform	Hard	Splinters Chips Needs filling	Relief Signs Furniture Architectural trim	Natural Stain	Common	Moderate
PINE, SUGAR/WHITE *(Pinus lambertiana, strobus)*	Tight Straight Uniform	Soft	Takes fine detail	Figures Relief Signs Wildlife	Paint Stain	Common	Inexpensive
REDWOOD *(Sequoia sempervirens)*	Tight Straight Uniform	Soft	Splinters Chips	Sculpture Signs	Natural	Common	Moderate
TUPELO *(Nyssa aquatica)*	Tight Straight Uniform	Soft	Takes fine detail	Figures Wildlife	Paint Stain	Regional	Moderate
WALNUT *(Juglans nigra)*	Semi-open Straight	Medium	Splinters	Relief Sculpture Signs Furniture Architectural trim	Natural	Common	Expensive

Special-delivery LETTER/NAPKIN HOLDER

Interlaced strips of walnut and oak provide a decorative, woven fabric look within a pair of tongue-and-groove oak side frames.

From ⅜" oak (we planed thicker stock to size, you could also resaw stock to a ⅜" thickness), cut a strip ½" wide by 13" long and a second strip ¾" wide by 36" long for the frames. Cut a ⅛" groove ¼" deep centered along one edge of each strip (we did this on the tablesaw using a regular ⅛" blade and pushstick). Now, crosscut the two top pieces (A) to 6" long from the ½"-wide strip. From the ¾"-wide strip, cut the two bottom pieces (B) to 6" long, and the four end pieces (C) to 5" long. Cut a ⅛" tenon ¼" long on each end of the top and bottom pieces (A, B). Cut the base (D) to size, bevel-ripping the edges at 5°. (For safety we cut a piece 2×12", bevel-ripped the edges, and then crosscut the base to length.)

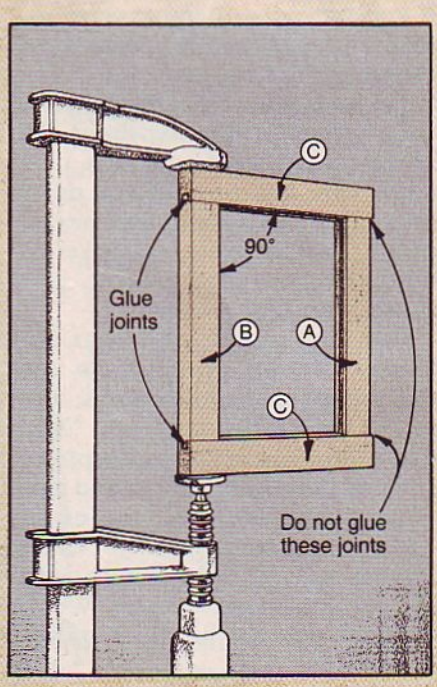

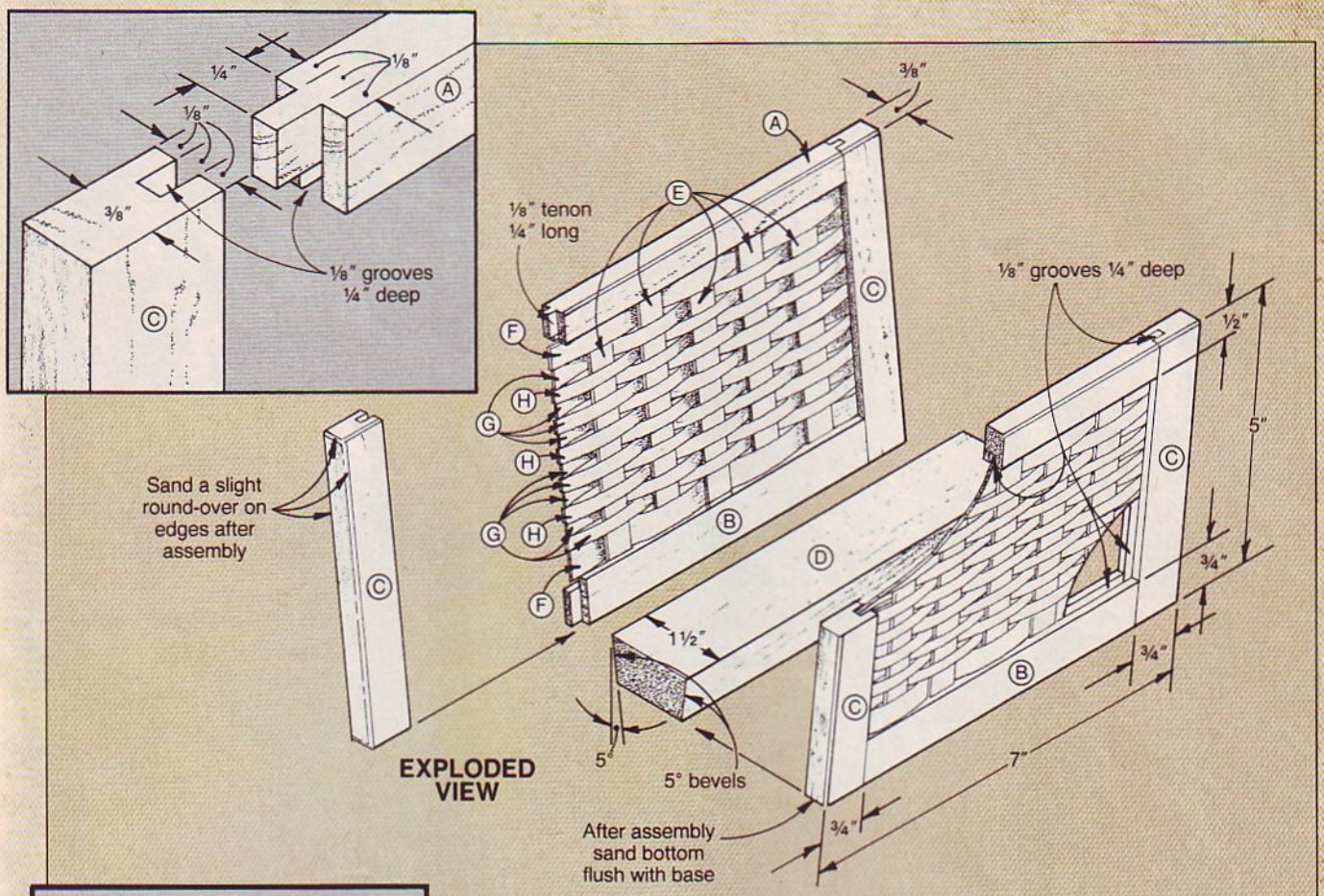

Bill of Materials

Part	Finished Size*			Matl.	Qty.
	T	W	L		
A*	⅜"	½"	6"	oak	2
B*	⅜"	¾"	6"	oak	2
C*	⅜"	¾"	5"	oak	4
D*	¾"	1½"	7"	oak	1
E*	1/16"	½"	4 3/16"	W	10
F*	1/16"	½"	5 15/16"	W	4
G*	1/16"	7/32"	5 15/16"	W	18
H*	1/16"	7/32"	5 15/16"	oak	6

*Initially cut parts marked with an * oversized. Then, trim each to finished size according to the how-to instructions.

Glue a bottom piece (B) between the end pieces (C) where shown at *left* for each frame. To keep the assembly square, insert the top pieces (A), *but do not glue the top piece in place yet.* Check the assembly for square, and make sure that the bottom edges are flush.

For the woven strips, plane a 2½×13" piece of walnut to ½" thick, a second piece of 3×13" walnut to 7/32" thick, and a 2×13" piece of oak to 7/32" thick. Using the thin-strip ripper shown on page 58, cut nine 1/16"-thick walnut strips for parts E and F to size from the ½"-thick piece of walnut. Then, cut 11 walnut strips for parts G and five oak strips for parts H from the remaining planed pieces. Crosscut the pieces to the lengths listed in the Bill of Materials. Crosscut extra strips to length; you might break a few in the weaving process.

Position the five vertical weavers (E) in the groove in the bottom piece (B) of one side frame. Soak the remaining strips in hot water for five minutes. Then, working from the bottom up, slide the woven strips in place around the vertical weavers where shown *above*. Repeat for the other frame. Let dry.

Put a drop of glue on the tenon and mating groove of each top piece (A). Clamp the top pieces in place. Wipe off the excess glue with a damp cloth. Later, remove the clamps and sand round-overs on the edges of each frame where shown on the drawing.

With the ends and bottom edges flush, glue and clamp the frame assemblies to the base. Sand the bottom of the holder flush (we did this on a stationary sander). Finish the holder as desired (we used aerosol lacquer).

Project Design: Keith Raivo Designs Photographs: John Hetherington Illustrations: Jamie Downing; Bill Zaun

THANKS FOR THE MEMORIES

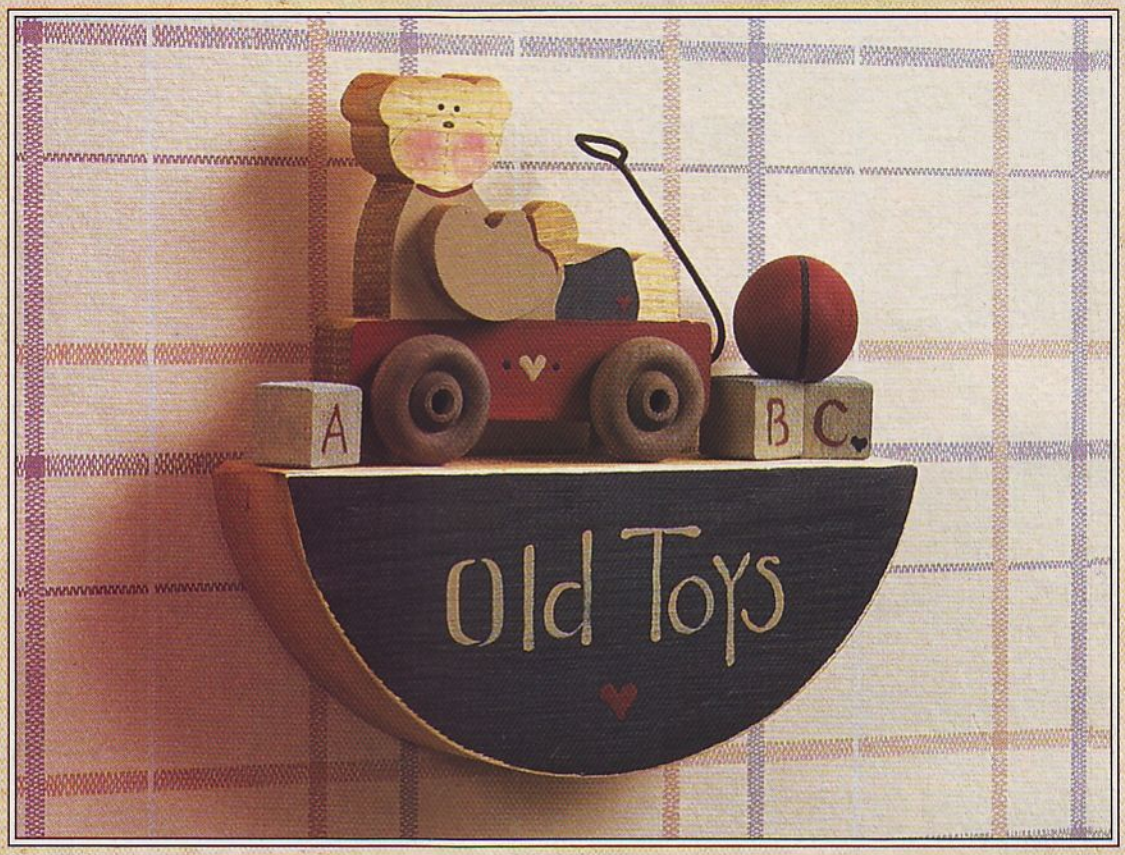

Hang these old toys on a wall

Toy-box treasures in miniature enrich this nostalgic wall decoration, a perfect country accent for a child's room.

Joint or saw one edge of a length of 2×4 to remove the rounded edges, and cut an 8"-long piece for the base. Make a copy of the full-sized pattern, *opposite page*, and adhere the base portion to the 2×4 piece with spray adhesive or trace the outline with carbon paper. Align the top of the pattern with the jointed edge.

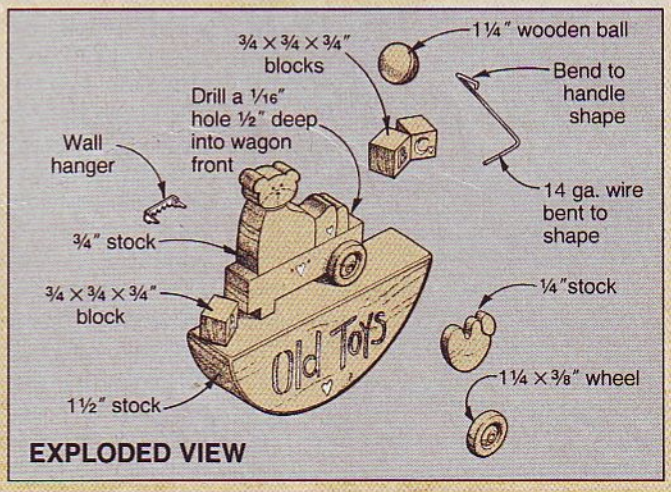

EXPLODED VIEW

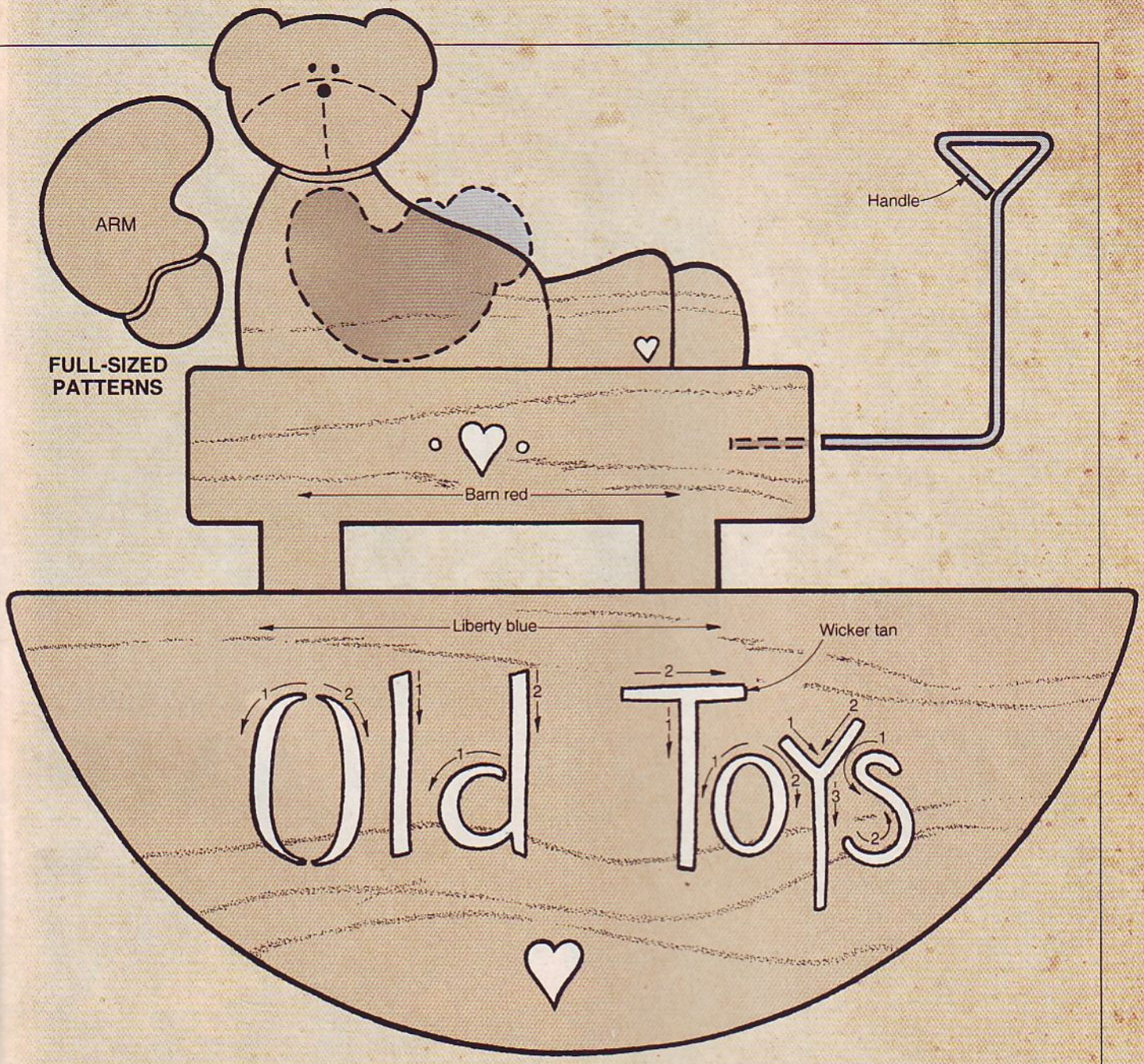

Next, cut a 5½" length of knot-free 1×6, and rip a ¾" strip from one edge. Also, cut a 1⅜×4" piece of ¼" stock (Here, we used lattice molding).

Transfer the bear/wagon pattern to the 1×6 piece, aligning the front of the wagon with one end of the stock. Transfer the arm pattern onto the ¼" stock.

Drill a 1/16" hole ½" deep for the wagon handle where shown on the pattern. Then, scrollsaw or bandsaw the bear/wagon, the arm, and the base. Cut three ¾" blocks from the ¾×¾" strip.

Sand a flat spot about ½" in diameter on a 1¼"-diameter wooden ball. Sand all parts and trace the painting lines to them.

Paint the parts with acrylic colors before assembling, following the color scheme shown in the photograph, *opposite page*. Apply thinned walnut stain to the edges of the base and bear/wagon part to give an aged look. Paint the wheels with thinned raw umber.

Draw the dashed lines on the bear's face, his eyes, and his nose with a fine, black, nylon-tipped pen. Rub cosmetic blush on his cheeks for the rosy highlights, and paint the block and base letters with a ⅛" flat brush.

Form the wagon handle from a 6" length of soft 14-gauge wire, such as baling wire. Epoxy the handle into the hole and bend it toward the bear. Finally, assemble the parts as shown in the drawing with hotmelt glue.

Design: Sherry Connors Photograph: John Hetherington Illustrations: Jamie Downing; Jim Stevenson

Hearts-and-hares PICTURE FRAME

You'll cut rabbets and rabbits as you build this delightful frame. Fill it with a photograph or a sampler for a bright accent in any room.

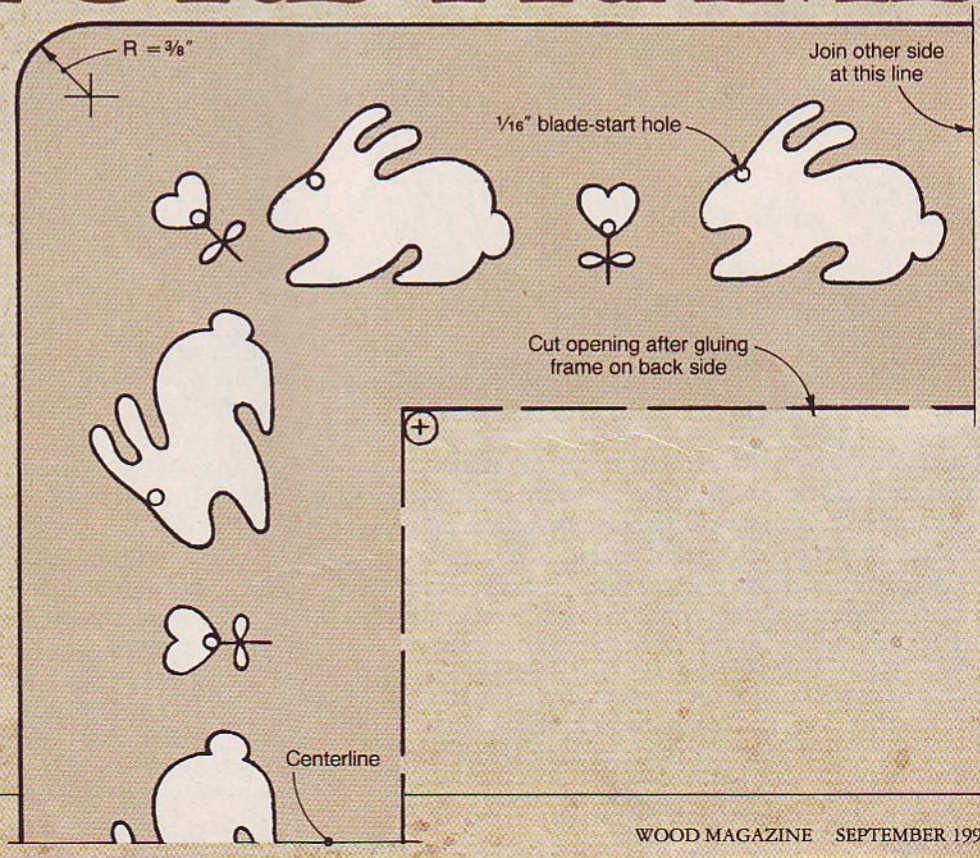

Rip a piece of ½"-thick hardwood (we used oak) to 8½" wide, and then crosscut it to 10½" long. From scrap, saw two ½×½×14" strips, and *carefully* cut a ¼" rabbet ¼" deep along one edge of each. Miter-cut a 5½" length and a 7½" length from each strip so that the rabbeted edges will meet along the inside.

Make two photocopies of the full-sized half-pattern, *below*, and trim one to the centerline. Match it to the other half, and then tape the two parts together to create a full-sized pattern. Affix it to your workpiece with spray adhesive.

Drill the four ⅛" start holes at the corners of the center cutout where indicated on the pattern. Next, drill 1/16" blade-start holes for the rabbits and heart flowers where shown on the pattern.

Cut out the rabbits and flowers with a scrollsaw (we used a #5 blade). When you're cutting the flowers, start with the heart-shaped blossom, and then cut down along the stem. Come partway back up the stem and make a figure-8 cut for the leaves.

After cutting out the rabbits and flowers, round the frame corners on a disc sander, and then rout all edges indicated on the drawing with a piloted ⅛" round-over bit. Turn the frame facedown, and glue the mitered, rabbeted strips to the backside of the frame as shown on the drawing. (The four ⅛" blade-start holes are locating points.) Cut the opening, using the rabbeted strips as guides.

Rout the inside edge of the opening with a flush-trimming bit. The router bit's pilot bearing should ride on the rabbeted strips (see Flush Routing, *right*). Rout a ⅛" round-over along the front inside edge of the opening. Apply a clear finish and attach the hanger.

Place a 5×7" piece of single strength glass, the picture, and a 5×7" piece of cardboard into the back and fasten with glazier points or brads. Cut and attach the leg for a tabletop frame.

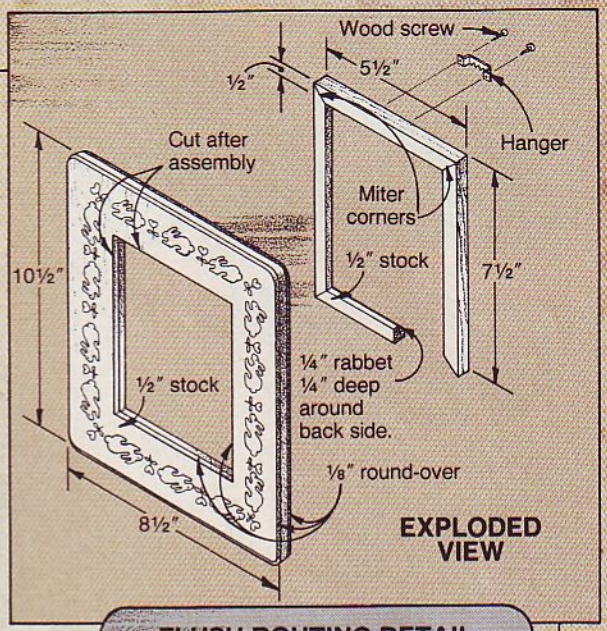

EXPLODED VIEW

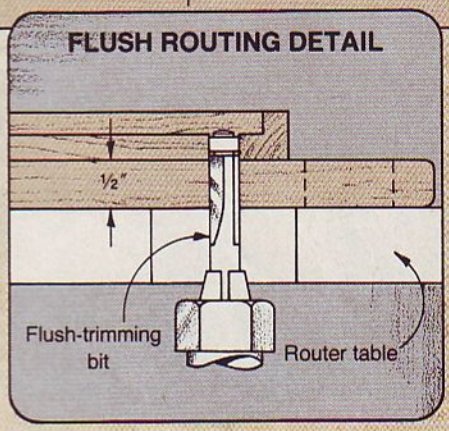

FLUSH ROUTING DETAIL

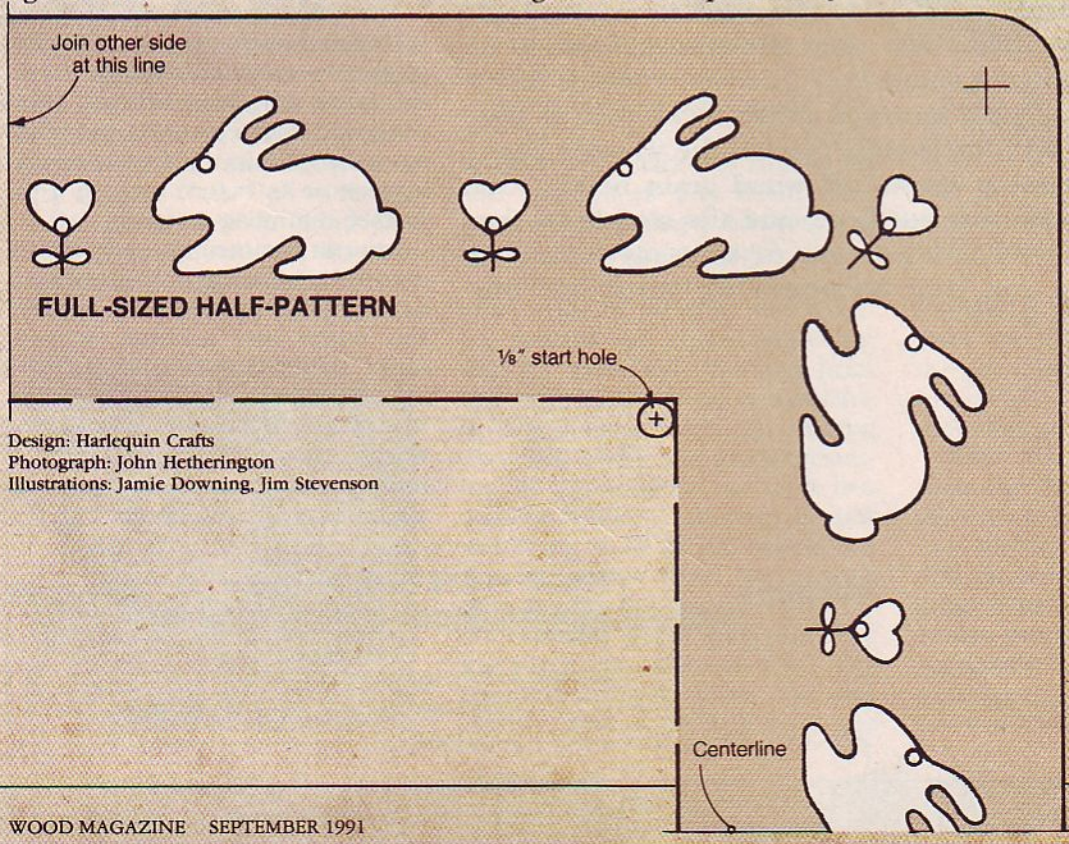

FULL-SIZED HALF-PATTERN

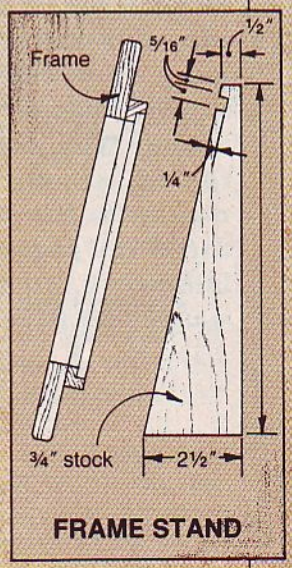

FRAME STAND

Design: Harlequin Crafts
Photograph: John Hetherington
Illustrations: Jamie Downing, Jim Stevenson

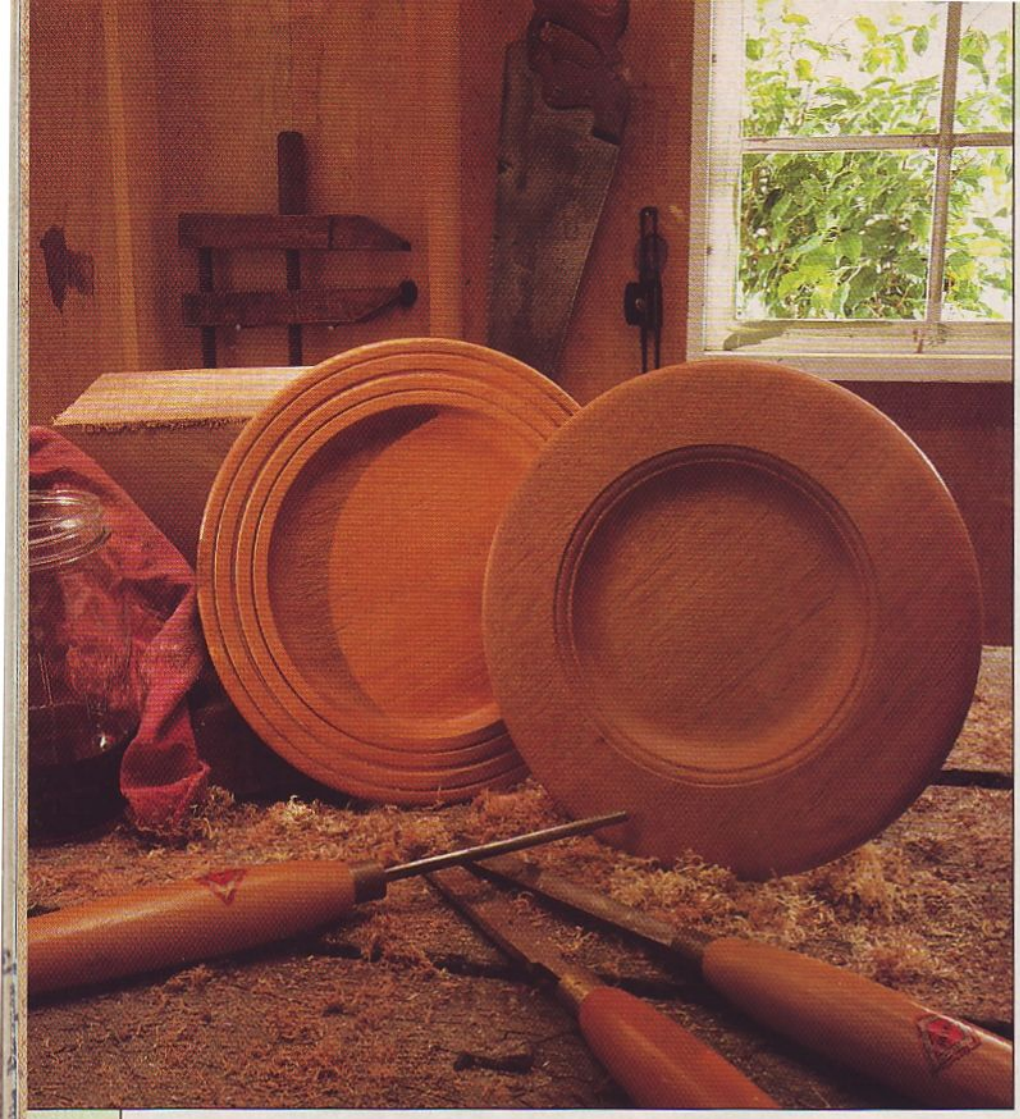

A short course in PLATE T

Shaping bowls offers so much enjoyment for novice and advanced woodturners alike, that they sometimes hesitate to move on to other turning challenges. And yet, a whole other world of equally gratifying turnings awaits them. One in particular? Why, the bowl's low-profile cousin, the wooden plate. In fact, no other turning shows off wood grain better. And now, with the shop-proven tips here, and the simple jig featured on page 84, you can partake of this adventure in lathework. To help you find plate-turning stock, see our sources on page 88.

Select the right stock

It's hard to beat a plate for displaying grain and figure, so look for distinctive markings as you select stock for your masterpiece. You'll need a blank about 1" to 2" thick and 6" to 12" square.

Cherry and walnut are good choices; burls and crotches make spectacular plates. Or, try exotic hardwoods—their rich, often colorful character can make your plate a stunning display piece. If you've shied away from exotics due to cost, you'll love plate-blank prices. You can turn two or three plates for what one bowl blank of a similar diameter costs.

You'll also appreciate the economy of plate turning when clean-up time arrives. More of the wood you bought will be in the project, and less will wind up in chips on the workshop floor. This has obvious benefits from a conservation standpoint, too.

You don't want to watch your completed plate curl up and split, so specify seasoned stock for turning. Some sellers can tell you how the wood has been dried. Let your stock stabilize in the workshop for a week or so before turning it to further minimize warping.

Lay out the turning disc with a compass, highlighting attractive or dramatic markings. Take the rim width into account as you move the center around to capture the best grain or figure. Sometimes, the wood will determine plate size—a planned 9" plate might not show the grain as well as a 9½" one would.

TYPICAL PLATE PROPORTIONS

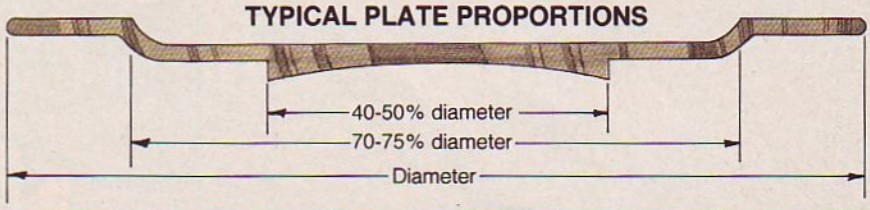

in flat-out fun

TURNING 101

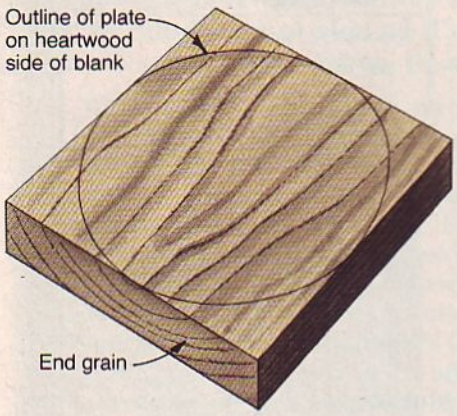

Outline your plate on the heartwood side of the blank, as shown *above*. (To identify the heartwood-side surface, look at the end grain of your stock. The end-grain arcs will be concave from the heartwood side, echoing the general plate profile.) Bandsaw the blank to rough shape, cutting on the waste side of the line.

Let's gather our tools

You won't need special tools to turn a plate. Your ⅜" bowl gouge (you could substitute a ½" spindle-turning gouge), a ½" round-nose scraper, and a square-nose or skew scraper 1" or 1½" wide will do the job. (Keep in mind that the bowl gouge removes wood in a hurry, speeding up the project.)

Fasten an auxiliary faceplate (a plywood or scrapwood disc) to the back of the blank with double-faced tape, or glue it on with a paper joint. Attach the faceplate with screws, as shown *below left*.

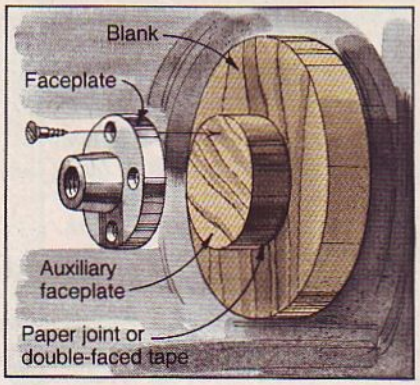

With the faceplate mounted onto the headstock spindle, set the tool rest close to the workpiece edge, at or slightly below center. (Your gouge should contact the disc above the centerline.) Rotate the blank by hand at least two revolutions to check for interference.

Then, select your lathe speed based on the disc size: 300 to 600 rpm for 10-12", 600 to 800 rpm for 8-10", and 800 to 1000 rpm for 6-8" turnings.

OK, let's turn a plate

Turn the edge of the disc down to your pencil line with the gouge. (Be sure to keep the handle lower than the tip while using the gouge. Aim the tool in the direction it will be moving across the wood, and roll it on its side so the open flute points the same way.)

Swing the tool rest around parallel to the face of your blank. With pencil, mark the rim width and location of any detail cuts. (see *opposite page, bottom,* for typical plate proportions.)

Now, with your gouge at the outer edge of the disc and working toward the center, start cutting the plate top. Working from the edge inward on a concave surface means you'll be cutting downhill (with the grain) resulting in a smoother cut with less tear-out. (When you turn a convex form, such as the plate's underside, work from the center outward for the same reason.)

Turn the plate top surface, keeping the center flat. On rimmed designs, slope the rim slightly toward the center of the plate. Add rim details such as beads or grooves if you want, or leave the rim plain for later carving or painting, as shown *below*.

Change over to the scrapers to remove ripples in the plate surface. Despite the name, a scraper *is* a cutting tool—the burred edge left after sharpening the tool shears the wood fibers.

DECORATIVE TREATMENTS

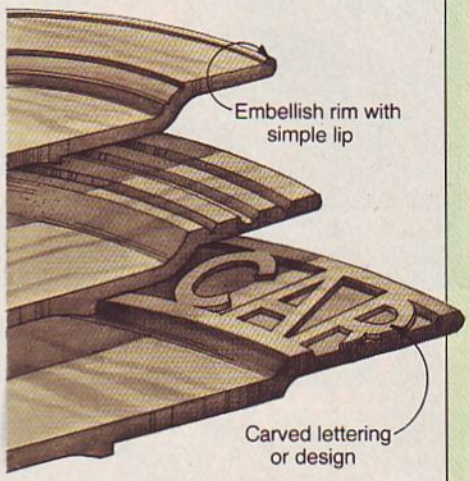

Keep the handle higher than the cutting edge when working with the scraper. Adjust the tool rest height so the edge of the scraper contacts your turning at or slightly below the centerline.

Finishing your masterpiece

Turn the edge and underside of the rim. Then, sand and finish the top while the plate remains mounted on the lathe.

With the top side completed, turn the bottom using the jig shown on page 84. Cut the plate foot slightly concave so the plate will sit without rocking or spinning. Finally, finish the bottom before putting your perfect plate on display.

Photograph: Hopkins Associates
Illustrations: Jim Stevenson

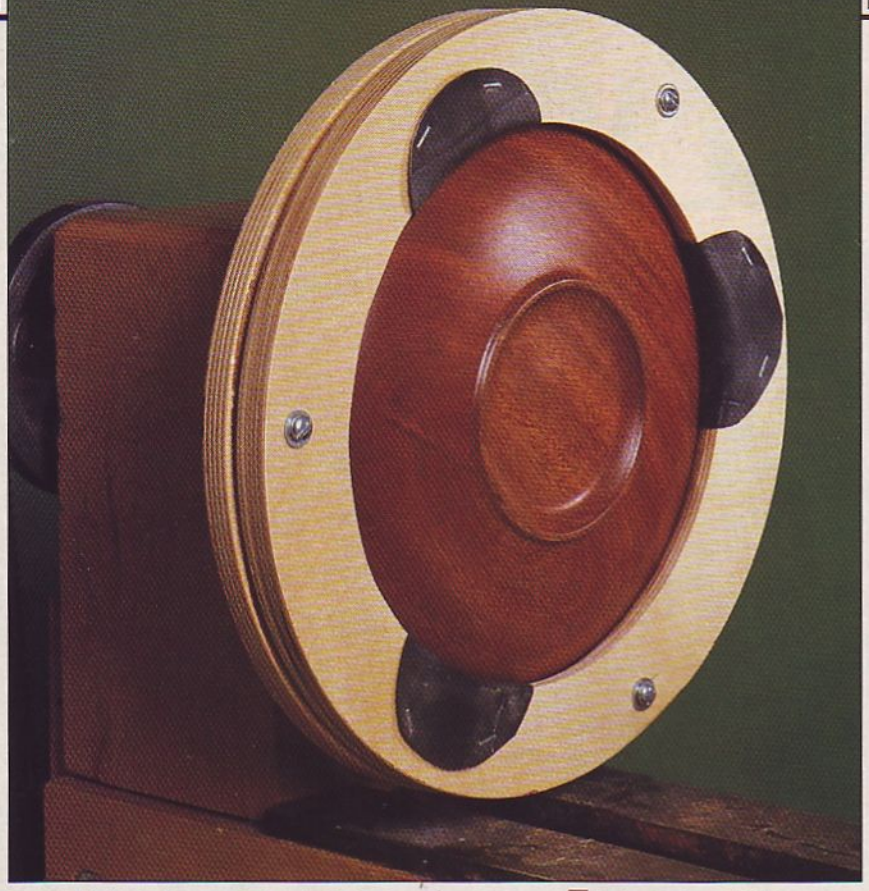

TURNING JIG FOR BETTER BOTTOMS

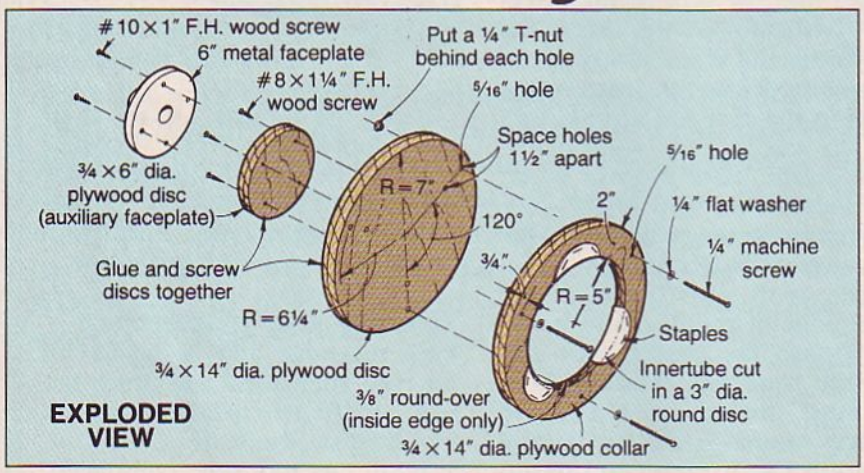

Project Design: Lanny Lyell
Photograph: John Hetherington
Illustrations: Kim Downing; Bill Zaun
Produced by Marlen Kemmet with Lanny Lyell and John Lea

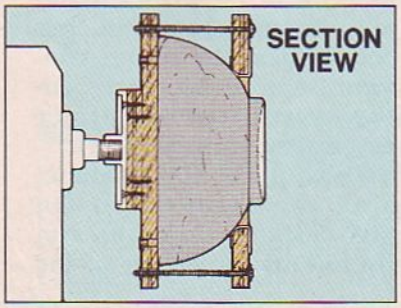

When people stop to admire your plates or bowls, do they peek at the bottoms to see if you've left any tell-tale screw holes? If so, then add this jig to your turning arsenal, and you'll be able to turn bottoms as well as the pros.

The jig shown here was built to fit our lathe, which has a 7½" swing (distance from the center of the headstock spindle to the bed). The outside diameter of the jig you build will depend on your particular lathe. Provide at least ½" clearance between the jig and bed. The diameter of the opening in the collar and the length of the machine screws will vary depending on the size of your turnings. We use several collars, all with different-size openings.

After attaching a 6"-diameter auxiliary faceplate and a large disc to your 6" metal faceplate, start the lathe and use a scraper to true up the outside face of the large disc. The outside disc always seems to have a little wobble.

Start the lathe again, and use a pencil or felt-tipped marker to mark concentric circles on the face of the large wood disc about ½" apart. These circles will make it easier when centering turnings on the disc later. Using an outside calipers, measure the thickness of the bowl bottom. This will come in handy when turning the bottom to shape, so you don't turn too deep and go through the base.

Mount your plate or bowl, bottom side out, where shown in the Section View drawing. Use mounting screws that stick out the back side of the large disc by only ¼" or ½". Tighten the three mounting screws, turn the lathe on, and observe the rotating bottom. Chances are you'll have to stop the lathe, loosen the screws slightly, adjust the turning's position, and retighten the screws. Repeat this process until the turning is perfectly centered (it always takes us about three or four tries). Turn the bottom to shape.

FINISHING TOUCHES

THE TREES THAT OWN THEMSELVES

Athens and Oxford, both in Georgia, claim the only trees in the world that own themselves and the land they grow on, according to the American Forestry Association's book *Famous and Historic Trees.*

William H. Jackson of Athens willed to a white oak tree possession of itself and the land for 8′ around it. The town clerk's office recorded the deed in 1820. At Oxford, the Rev. J.W. Yarbrough deeded an oak tree and its occupied land to itself in 1929.

SAP TRAPS PREHISTORIC AIR

Scientists wanting to know what the air was like millenniums ago turn to trees. Amber—the hardened resin or pitch—from ancient trees contains bubbles of trapped air. Scientists release these tiny samples of prehistoric air for analysis by grinding amber in a vacuum chamber. Studies have compared the air composition of today to that of 80 million years ago, indicating changes in the balance of nitrogen and oxygen.

"IF I HAD A HAMMER"

R.A. Salaman, writing in his *Dictionary of Tools* (Macmillan Publishing Company, New York, 1975), reports that the first carpenter's claw hammer as we know it today was forged by blacksmith David Maydole of Norwich, Connecticut, in 1840. The deep adze-eye design that kept the head on the handle proved so popular that Maydole's smithy quickly bloomed into a factory.

FRONT AND CENTER: WOOD READERS WHO MAKE A DIFFERENCE

Name: Dean Kohl **Age:** 38
Home: Rockford, Michigan
Family: Wife Linda, son David, daughter Bettsy
Occupation: Cabinetmaker
***WOOD*® connection:** Subscriber since 1984

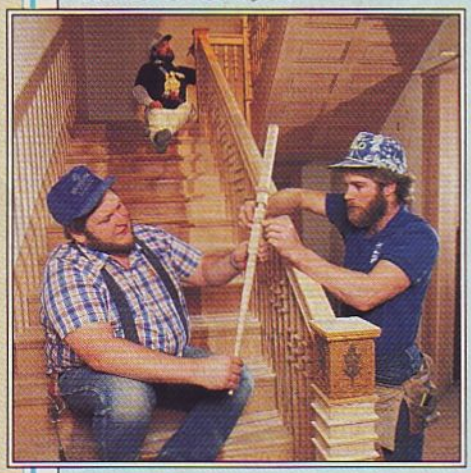

Dean Kohl, left, and fellow volunteers Robert Vander Ploeg, right, and Richard Rolinda, admire the Victorian railing they restored in the Children's Transplant Association's Omaha potter's house.

Dean Kohl loves to work wood. That's why he started his own cabinet shop in 1986. Lately, his woodworking skills have mostly been employed helping the needy.

Seven years ago Dean and Linda's 14-month-old daughter died while awaiting a liver transplant. Since then, they have been active in the Children's Transplant Association (CTA), a support group for families with children needing organ transplants. Among other activities, CTA provides low-cost, temporary, family housing in a number of U.S. cities for those awaiting transplant operations. And that's where Dean's skill comes in.

In 1985, Dean served as volunteer general contractor, remodeling extensively the first CTA family house in four months, with the aid of donated union labor. Called a potter's house, in biblical reference to renewal (Jeremiah 18:34), the 13-bedroom home is in Minneapolis.

Dean, now CTA's director of facility planning, supervises remodelings for several months each year in different cities. After completing a 12-family CTA potter's house in Omaha, Dean was off to New Orleans.

"I don't seem to get much done in my own shop, but Linda works and we manage," says Dean. "I'm only glad I can help transplant families. I know from experience that medical costs can be draining—these people need all the help they can get. The potter's houses provide not only food and shelter, but emotional support."

For more information on the Children's Transplant Association, write: *CTA, P.O. Box 53699, Dallas, TX 75253.*

Do you know a subscriber who makes a difference? Send details to: Front and Center, WOOD magazine, P.O. Box 11454, Des Moines, IA 50336-1454.

Illustration: Jim Stevensen

Photograph: Bill Batson